Electric Boilers

BTH ULTRA

Models ranging from 12 kW to 36 kW 208/240 Volts (1 phase)

INSTALLATION & OPERATION MANUAL

Your *BTH ULTRA Electric Boiler* has been carefully assembled and factory tested to provide years of trouble-free service. The following information and safety measures are provided to enable proper installation, operation, and maintenance of this product.

It is imperative that all persons who are expected to install, operate or adjust this boiler should read these instructions carefully.

The accessories included with the boiler are shipped within the cabinet of the unit.

Any questions regarding the operation, maintenance, service or warranty of this electric boiler should be directed to the supplier.

When all installation steps have been completed, keep this installation manual in a safe place (close to the boiler) for future reference.

THERMO 2000 INC. Revision: January 2023
Printed In Canada

Table of contents

Section 1: Technical specifications 4
Table 1: Technical data on boilers operating at 240 Vac /1ph[1] : 4
Table 2 : Boiler connections and dimensions (12-24 KW) 5
Table 3 : Boiler connections and dimensions (27-36 KW) 5
Section 2: INTRODUCTION 6
2.1 LOCAL INSTALLATION REGULATIONS 6
2.2 CORROSIVE ENVIRONMENT 6
2.3 INSPECTION UPON RECEPTION 6
2.4 TO BE CHECKED 6
Section 3: INSTALLATION 7
3.1 SAFETY MEASURES 7
3.2 LOCATION 7
3.3 CLEARANCES 7
Table 4: Boiler Clearances 7
3.4 PIPING INSTALLATION 8
3.4.1 Type of installation 8
3.4.2 Boiler piping connection 12
Local codes may dictate the type of pipe to be used for the connections. 12
Install isolating valves to facilitate maintenance 12
3.4.3 Pressure relief valve 12
3.4.4 Expansion tank 12
3.4.5 Water pressure regulator 12
3.4.6 Air eliminator 12
3.4.7 Circulating pump 12
Table 5: Temperature rise vs flow rate (GPM) 12
3.4.8 Drain valve 12
3.4.9 Strainer 12
3.4.10 Dual Energy piping 13
3.5 ELECTRIC CONNECTIONS 13
3.5.1 Main Electric supply 13
3.5.2 Electrical supply of External accessories 14
3.5.3 Outdoor temperature sensor 14
3.5.4 Connecting the thermostat and pump. 14
3.5.4 Dual-energy connection with an auxiliary boiler. 15
Section 4: ADJUSTMENT OF THE CONTROLLER 18
4.1 INTRODUCTION 18
4.2 DISPLAYED INFORMATION 18
4.3 OPERATION OF THE INTERFACE 19
4.4 OPERATION IN “FIXED BOILER TEMPERATURE SET POINT” 19
4.5 OPERATION WITH “OUTDOOR RESET”: 19
4.6 PURGE DELAY OF THE PUMP 20
4.7 AUTOMATIC HEATING SHUT DOWN 20
4.8 CONFIGURATION OF THE CONTROLLER 20
4.9 ADJUSTMENTS OF THE TARGET TEMPERATURE BY THE USER: 22
4.10 BOOST SYSTEM OPERATION 22
4.11 OPERATION IN DUAL-ENERGY: 23
Section 5: START UP OPERATION 24
5.1 PREPARATORY STEP 24
5.2 STARTUP & INSPECTION 24
5.3 COMPLEMENTARY CHECKS ON DUAL-ENERGY INSTALLATIONS 24

Section 6 MAINTENANCE 25
6.1 INTRODUCTION 25
6.2 AT ALL TIMES 25
6.3 TWICE A YEAR 25
6.4 ANNUALY 25
Section 7- TROUBLE SHOOTING 26
7.1 TROUBLE SHOOTING TABLE 26
7.2 SPARE PARTS 28
BTH ULTRA LIMITED WARRANTY 31

Figure 1 : Boiler dimensions (12-24 KW) 5
Figure 2 : Boiler dimensions (27-36 KW) 5
Figure 3 : Mounting positions 8
Figure 4 : Typical Installation on heating floor 8
Figure 5 : Typical installation on fin-tube baseboards with zoning valves 9
Figure 6 : Multi-pump zoning 9
Figure 7 : Typical Installation in Dual-Energy Series 10
Figure 8 : Typical installation with three way valve 10
Figure 9 : Zoning with Multiple pumps 15
Figure 10 : Zoning with motorized valves 15
Figure 11 Connexions without three way valve 16
Figure 12 : Connexions with three way valve 16
Figure 13 : Wiring diagram (12-24 KW) 17
Figure 14 : Wiring diagram (27-36 KW) 17
Figure 15 : UltraSmart Controller Display 18
Figure 16 : UltraSmart Control Module 19
Figure 17 : Back of the controller 21
Figure 18 : Spare parts (front, 12-24 KW) 28
Figure 19 : Spare parts (top, 12-24 KW) 28
Figure 20 : Spare parts (front, 27-29 KW) 29
Figure 21 : Spare parts (top, 27-36 KW) 29
Figure 22 : Spare parts (front, 33-36 KW) 30

Section 1: Technical specifications

Table 1: Technical data on boilers operating at 240 Vac /1ph[1] :

BTH ULTRA	Capacity (KW)		Amps[2]		Heating Elements (240 V)	Stages	Suggested size at 240V/1ph.[3]		
							Cable		Breaker (Amp.)
	208V	240V	208V	240V			Cu	Al	
12	9,0	12	43.5	50	4 x 3 KW	4	6	4	70
15	11.2	15	54.3	62.5	2 x 3 KW + 2 x 4.5 KW	4	6	4	80
18	13.5	18	65.2	75	4 x 4.5 KW	4	4	2	100
20	15	20	72.5	83.3	4 x 5 KW	4	3	2	110
24	18	24	87	100	4 x 6 KW	4	2	0	125
27	20.2	27	97.9	112.5	6 x 4.5 KW	6	1 x 1 or 2 x 6[4]	1 x 00 or 2 x 4[4]	2 x 80 or 150
29	21.7	29	104	120	4 x 5 KW + 2 x 4.5 KW	6	1 x 1 or 2 x 6[4]	1 x 00 or 2 x 4[4]	2 x 80 or 175
33	25	33	119.6	137.5	3 x 5 KW + 3 x 6 KW	6	2 x 4[5]	2 x 2[5]	2 x 100
36	27	36	130.5	150	6 x 6 KW	6	2 x 4[5]	2 x 2[5]	2 x 100

[1] Electrical supply 120/240V or 120/208V – 1ph (L1-N-L2) with three conductors and a ground **or** a supply with two conductors 240V or 208V – 1ph (L1-L2) with a ground if the application does not require a 120V electrical supply for external accessories such as a pump, etc

[2] Add the amperage of the circulating pump and other external accessories if they are connected to the boiler (max. 5A).

[3] A higher cable size could be required. In all cases the local electrical code has priority. The electrician has the responsibility to select the appropriate size.

[4] The two main terminal blocks can be converted to one on the job site with the exception to the 29 kW model with aluminium wires which must use two wires.

[5] Two double pole breakers

1 kW = 3412 Btu

Table 2 : Boiler connections and dimensions (12-24 KW)

Connections	
Inlet (return)	1 “ NPT Fem
Outlet (supply)	1 “ NPT Fem
Safety valve	1“reduced to 3/4 “ NPT Fem
Draining valve	1“reduced to 3/4 “ NPT Fem
Shipping weight	63 lbs

Item	Dimension (inches)
A	21-1/2
B	9
C	11-3/4
D	3-5/8
E	2-3/8
F	14-3/4
G	5
H	9-3/4
I	20
J	1-1/2

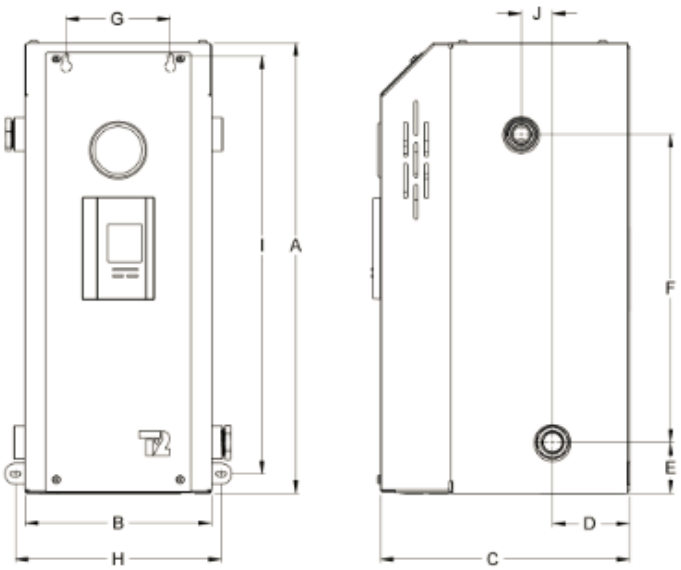

Figure 1 : Boiler dimensions (12-24 KW)

Table 3 : Boiler connections and dimensions (27-36 KW)

Connections	
Inlet (return)	1 ¼ “ NPT Fem
Outlet (supply)	1 ¼ “ NPT Fem
Pressure relief valve	1 ¼“reduced to 3/4 NPTFem
Drain valve	1 ¼“reduced to 3/4NPT Fem
Shipping weight	75 lbs

Item	Dimension (inches)
A	21-1/2
B	11
C	11-3/4
D	3-1/2
E	2-3/4
F	14-1/4
G	7
H	11-5/8
I	20
J	1-3/4

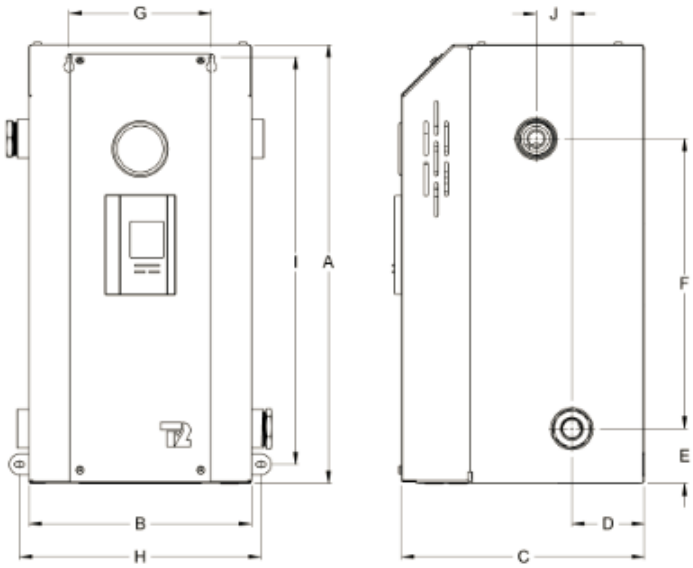

Figure 2 : Boiler dimensions (27-36 KW)

General Safety Precautions

Be sure to read and understand the entire Installation & operation manual before attempting to install or to operate this water heater. Pay particular attention to the following General Safety Precautions. Failure to follow these warnings could cause property damage, bodily injury or death. Should you have any problems understanding the instructions in this manual, STOP, and get help from a qualified installer or technician

Section 2: INTRODUCTION

WARNING

These important safeguards and instruction appearing in this manual are not meant to cover all possible conditions and situations that may occur. It should be understood that common sense, caution and care are factors which cannot be built into every product. These factors must be supplied by the person(s) caring for and operating the unit.

2.1 LOCAL INSTALLATION REGULATIONS

This electric boiler must be installed in accordance with these instructions and in conformity with local codes, or in the absence of local codes, with the National Plumbing Code and the National Electric Code, current edition. In any case where instructions in this manual differ from local or national codes, the local or national codes take precedence

2.2 CORROSIVE ENVIRONMENT

The electric boiler must not be installed near an air duct supplying corrosive atmosphere or with high humidity content.
When a boiler defect is caused by such conditions, the warranty will not apply

2.3 INSPECTION UPON RECEPTION

Inspect the electric boiler for possible shipping damage. The manufacturer's responsibility ceases upon delivery of goods to the carrier in good condition. Consignee must file any claims for damage, shortage in shipments, or non-delivery immediately against carrier.

2.4 TO BE CHECKED

Please check the identification tag on the unit to make sure you have the right model (Capacity in kilowatt, voltage, number of phase and ASME construction or not ASME).

List of components shipped with the unit:

- **Pressure relief valve set at 30 PSI.**
- **Drain valve.**
- **Two reducer fittings**
- **Temperature & pressure indicator**
- **Outdoor temperature sensor**
- **Installation and operating manual**

Section 3: INSTALLATION

The manufacturer's warranty does not cover any damage or defect caused by installation, or attachment, or use of any special attachment other than those authorized by the manufacturer into, onto, or in conjunction with the water heater. The use of such unauthorized devices may shorten the life of the boiler and may endanger life and property. The manufacturer disclaims any responsibility for such loss or injury resulting from the use of such unauthorized devices

3.1 SAFETY MEASURES

All installation will include the supplied pressure relief valve which limits the maximum operating pressure to 30 psi (207 kPa).

This electric boiler is designed to be installed on a circuit operated between 50°F to 190°F (10°C to 90°C) and at a maximum operating pressure of 30 psi (207 kPa).

The unit in designed solely to be used on a close loop hydronic heating system. The heat transfer solution must be a solution of water or if a freeze protection is required, a mix solution Water/propylene glycol specially made for hydronic heating systems and having a maximum concentration of 50% (do not use plumbing or automobile glycol).

The boiler is equipped with an automatic high limit temperature control set at 210°F 99°C) and some models have a second limit device manually re-settable set at 227F (108C). If the heating distribution system on which the boiler is installed requires a high limit controller having a lower setting, this controller will be added to the system and connected in series with the factory installed limit control.

3.2 LOCATION

The electric boiler should be installed in a clean, dry location. Long hot water lines should be insulated to conserve water and energy. The electric boiler and water lines should be protected from exposure to freezing temperature.

The boiler can be mounted vertically or horizontally (see fig.3) directly on a solid surface with 4 adequate screws inserted in the provided boiler openings. Make sure it is properly leveled

The electric boiler must be located or protected so as not to be subject to physical damage, for example, by moving vehicles, area flooding, etc.

All models can be installed directly on a combustible wall and into an alcove. The location must have sufficient ventilation to maintain an ambient temperature not exceeding 90°F (32°C).

CAUTION

The electric boiler should not be located in an area where leakage of the tank or water connections will result in damage to the adjacent area or to lower floors of the structure. When such areas cannot be avoided, a suitable drain pan or non-flammable catch pan, adequately drained must be installed under the boiler. The pan must be connected to a drain.

NOTE: Auxiliary catch pan MUST conform to local codes.

3.3 CLEARANCES

For adequate inspection and servicing the following minimum clearance is necessary:

Table 4: Boiler Clearances

Sides	3 inches
Electric elements side	14 inches
Front side of the boiler	3 inches*
Back	0 inches

*If the boiler is installed in a closed compartment, allow an access service opening and adequate ventilation to maintain an ambient temperature lower than 90°F/32°C.

3.4 PIPING INSTALLATION

The inlet and outlet piping of the boiler must be in conformity with the different configurations shown below. Make sure that the fluid flows is in the proper direction.

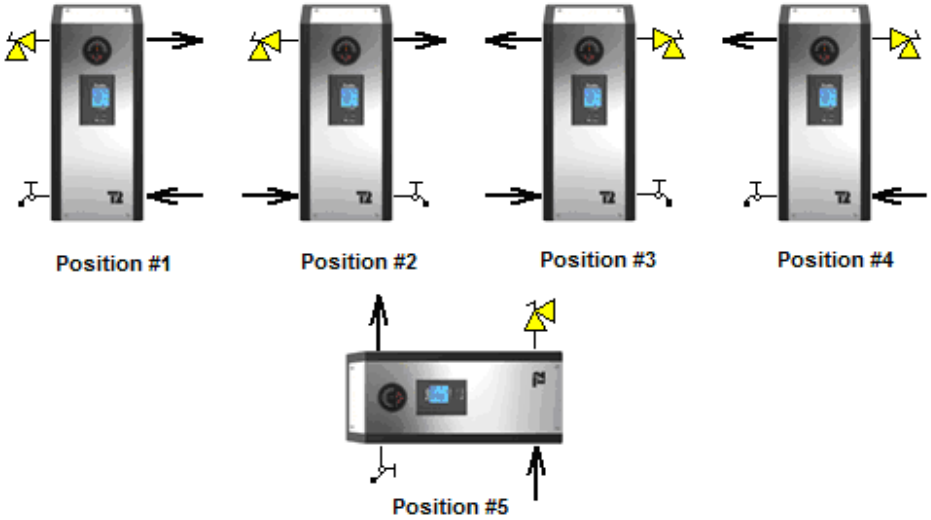

Figure 3 : Mounting positions

3.4.1 Type of installation

You will find below on figures 4 to 8 the typical piping arrangement for the two main types of installation. The first being as a self-operating unit and the others being connected to an auxiliary boiler in dual-energy.

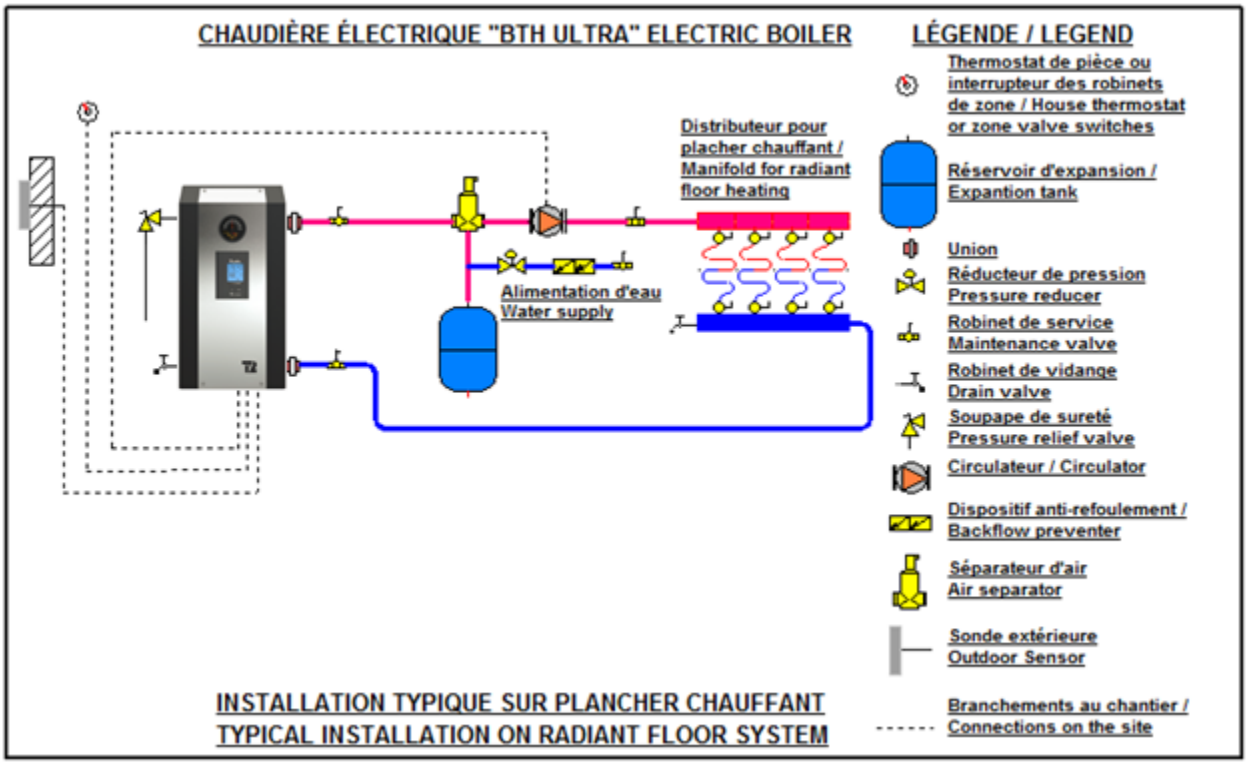

Figure 4 : Typical Installation on heating floor

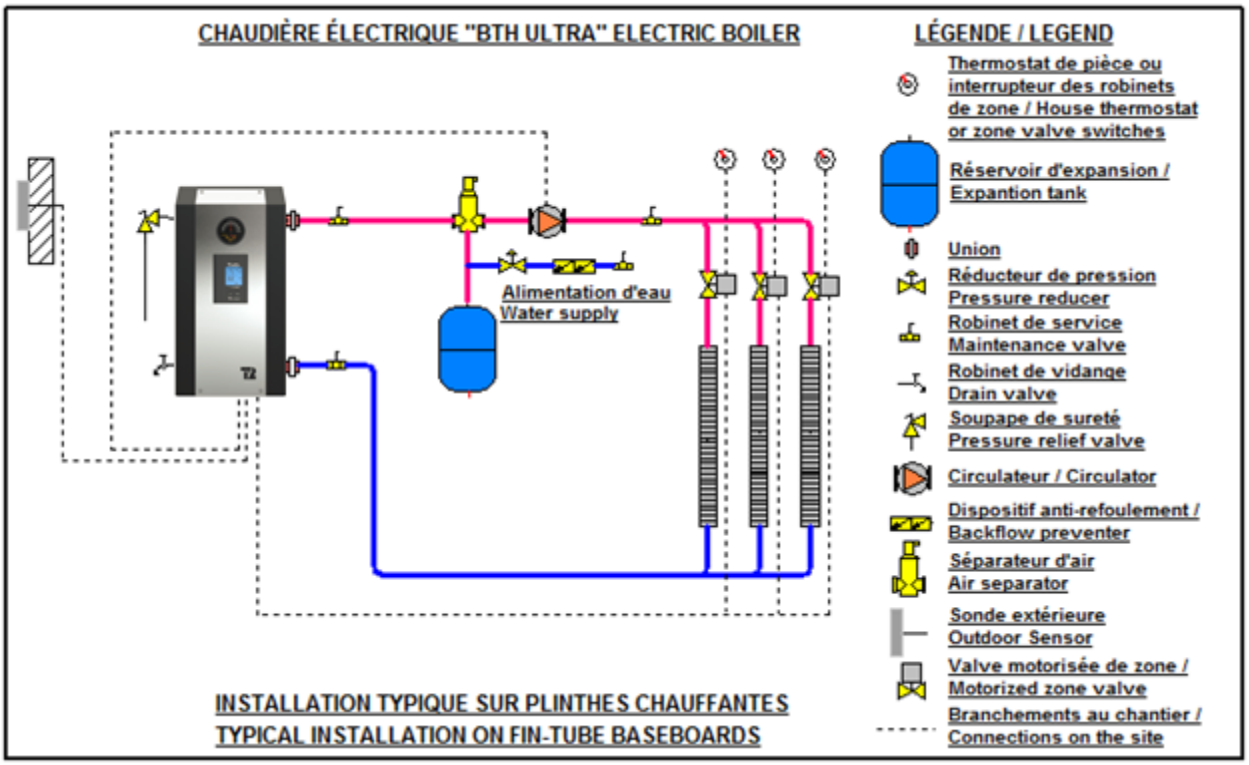

Figure 5 : Typical installation on fin-tube baseboards with zoning valves

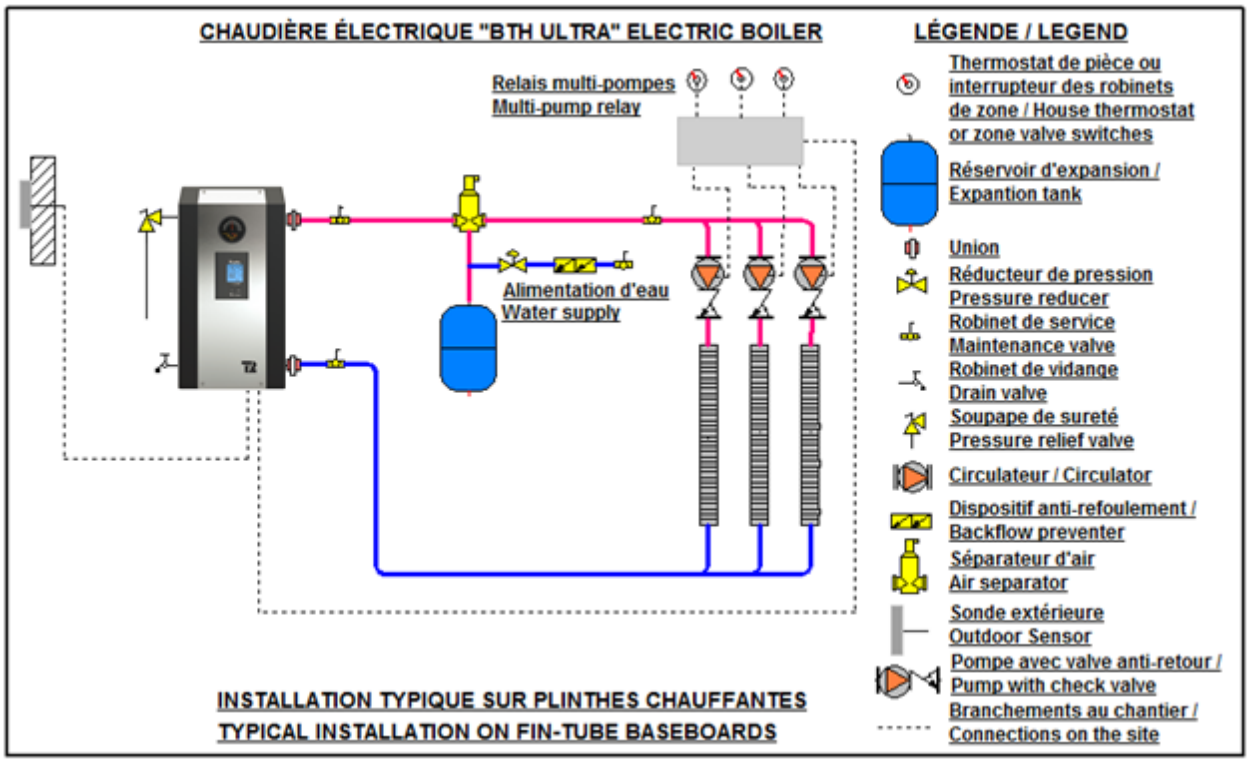

Figure 6 : Multi-pump zoning

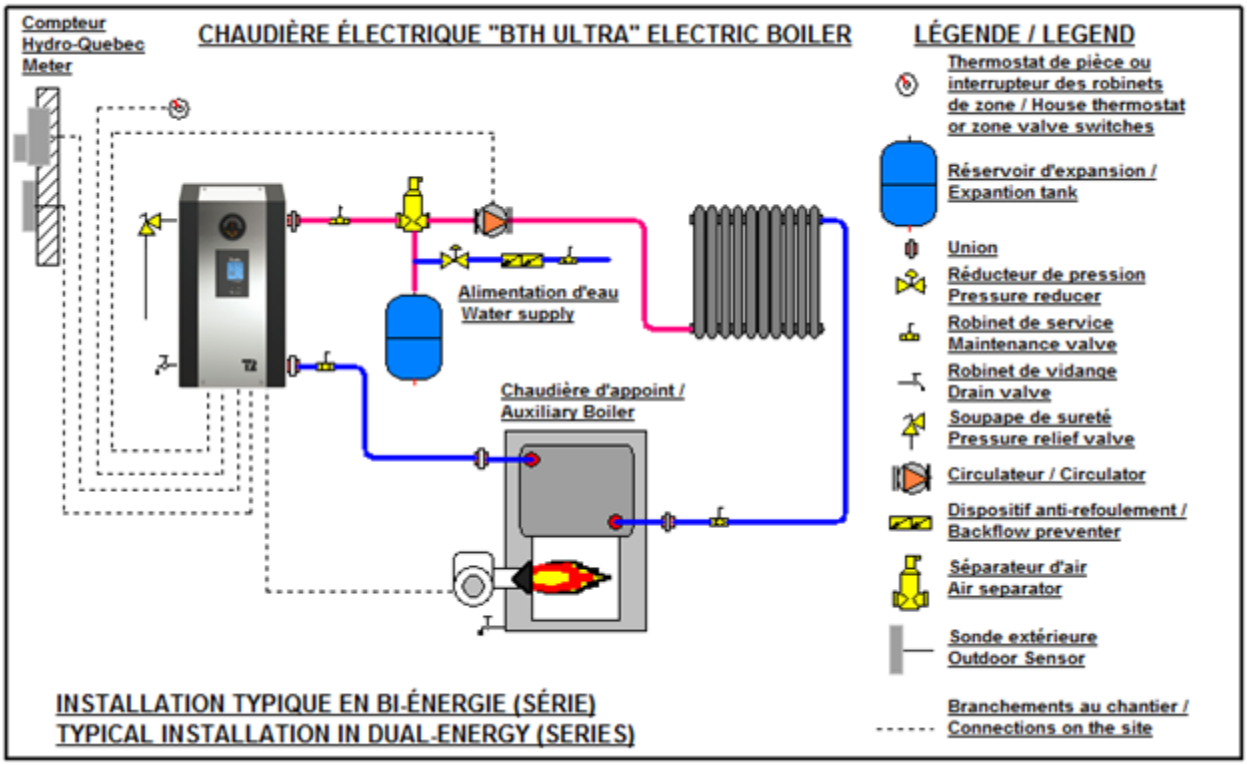

Figure 7 : Typical Installation in Dual-Energy Series

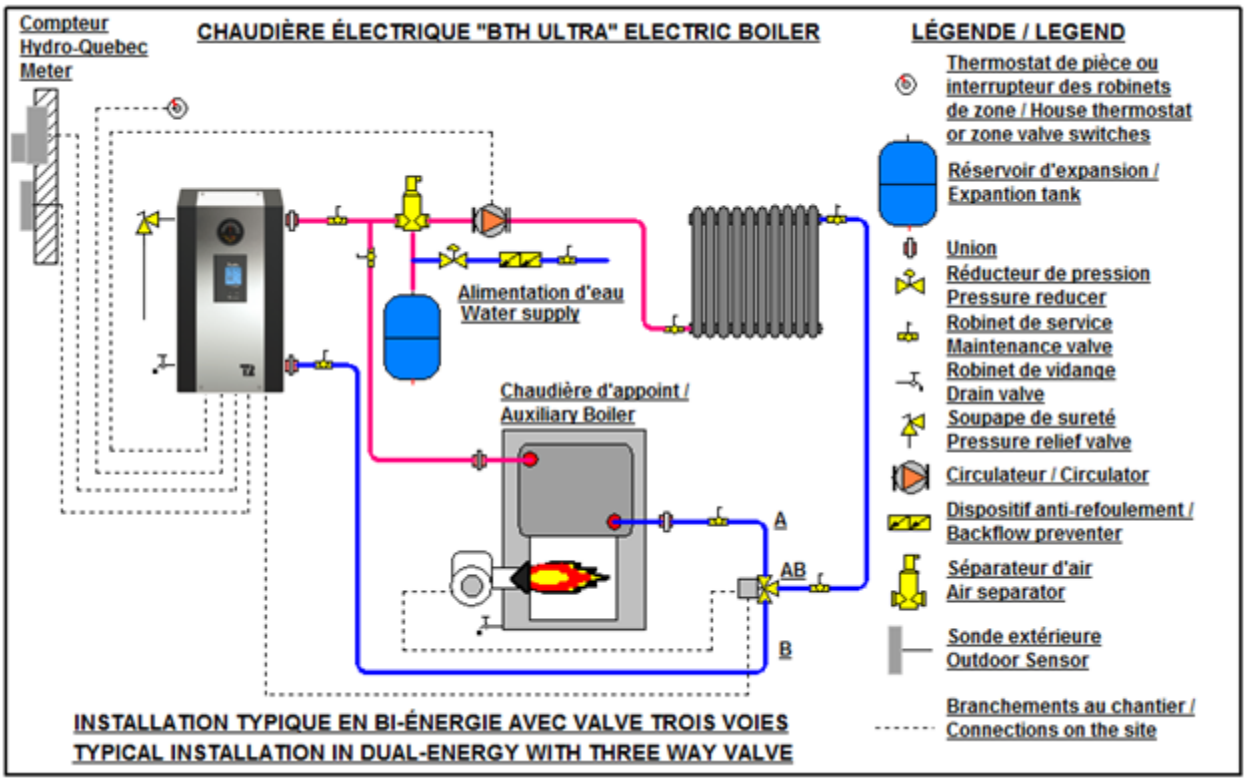

Figure 8 : Typical installation with three way valve

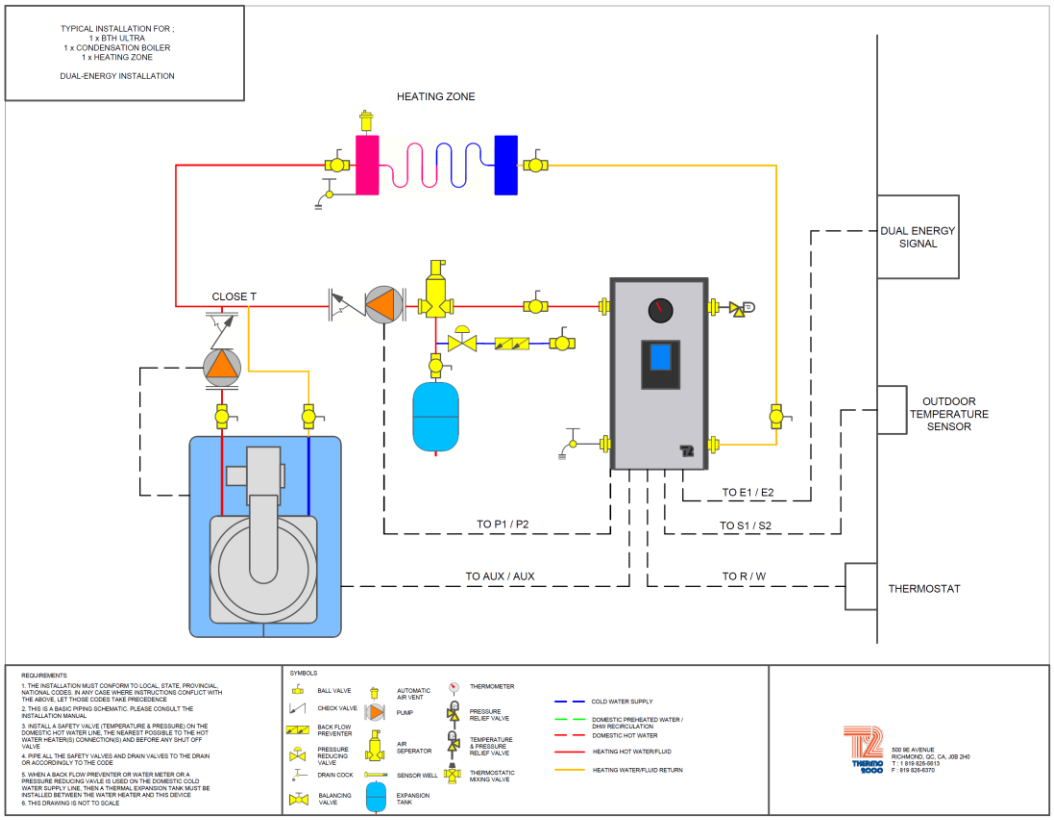

Figure 9 - Typical Dual-Energy installation with a condensation boiler (1 zone)

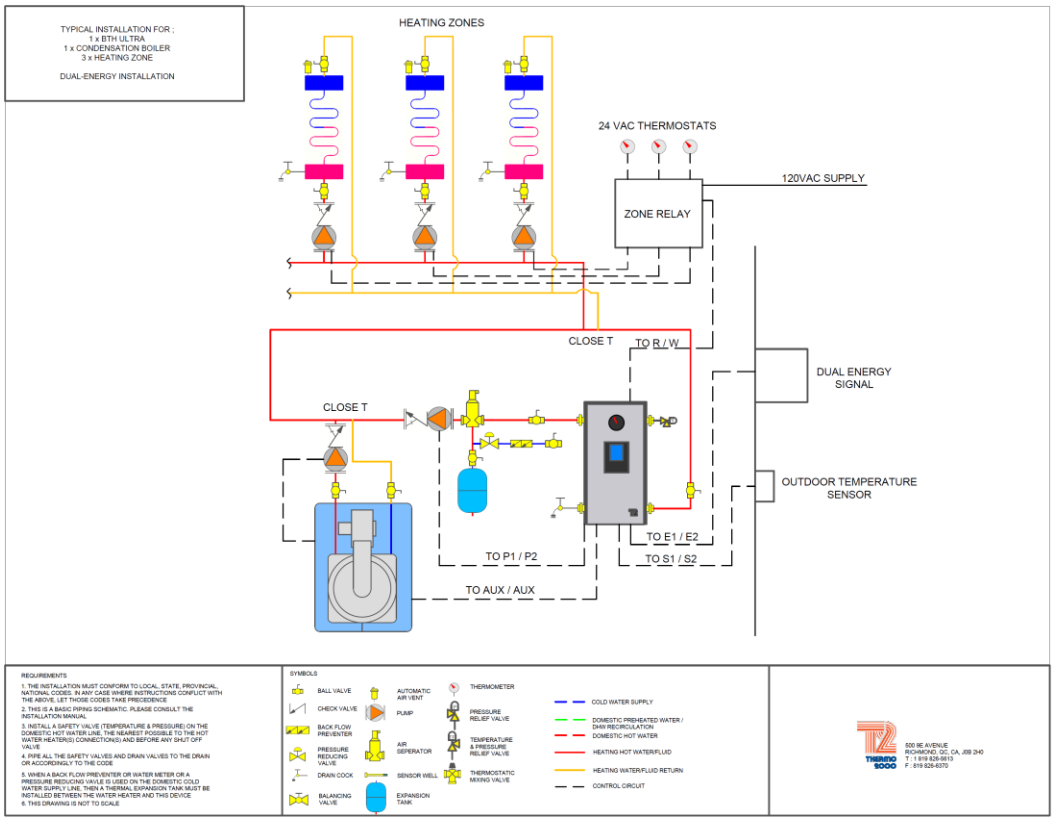

Figure 10 - Typical Dual-Energy installation with a condensation boiler (3 zones)

3.4.2 Boiler piping connection

Make sure you connect the accessories and the piping to the proper connection fittings as indicated at figure 2 above and according to the selected mounting position. The outlet and inlet boiler connections are located on each sides. They consist of 4 steel couplings (1”NPTF on 12 to 24kW models and 1-1/4”NPTF on 27 to 36kW) where the piping connection will be made.
Local codes may dictate the type of pipe to be used for the connections.
Install isolating valves to facilitate maintenance

3.4.3 Pressure relief valve

This component is supplied with the unit and must be installed on the boiler. It is designed to automatically open at approximately 30 psi.to the appropriate connection according to the mounting position.
Connect the outlet of the relief valve downward to a safe location in case of discharge.
The piping diameter used for the discharge piping shall not be smaller than that of the valve outlet. No valve of any type, restriction or reducer coupling should be installed on the discharge line. Local codes shall govern the installation of relief valves.

3.4.4 Expansion tank

The expansion tank must be able to store the increase volume of boiler water occurring when the boiler water increases in temperature. The maximum allowable operating pressure is 30 psi (207 kPa). Contact your plumbing supply house for assistance.

3.4.5 Water pressure regulator

The boiler should be installed in such a way that it can automatically be fed with water in the event of a pressure drop.
The minimum pressure obtained when the system is cold is generally 12 psi (83 kPa).
This accessory shall be equipped with one or more check valves to avoid all possibilities of the boiler water returning to the potable water supply network (local regulation should be applied)

3.4.6 Air eliminator

Installation of manual or automatic air vents are required to eliminate all air from the boiler and the heating distribution system.
The main air eliminator must be installed near the outlet of the boiler on the highest point of the main supply piping. It is imperative to insure that all air possibly located in the boiler be eliminated at all time.

3.4.7 Circulating pump

Water flow is required at all time when the boiler is operating.
The pump shall be selected such as to be able to supply adequate flow in relation to the heating distribution system on which it will be connected and the heating capacity of the boiler installed.

Table below shows required flow in relation to the power capacity of the boiler and the required temperature drop in the heating distribution system. On System with baseboard heaters, 20°F temperature drop is normally recommended and on radiant floor application a value of 10°F is generally used.

Table 5: Temperature rise vs flow rate (GPM)

Model	KW	Diff. Temp. 10ºF	Diff. Temp. 20ºF
BTH ULTRA 12	12	8,2	4,1
BTH ULTRA 15	15	10,2	5,1
BTH ULTRA 18	18	12,3	6,1
BTH ULTRA 20	20	13,7	6,8
BTH ULTRA 24	24	16,4	8,2
BTH ULTRA 27	27	18,4	9,2
BTH ULTRA 29	29	20,5	10,2
BTH ULTRA 33	33	22,5	11,3
BTH ULTRA 36	36	24,7	12,3

Your heating wholesaler shall be in good position to recommend the appropriate model for your application.
If the pump is supplied by the PP terminals of the boiler, its amperage plus the amperage drawn by other 120V external components must not exceed 5A.

3.4.8 Drain valve

Installed at the lowest part of the unit, it allows the boiler to be drained if defective components need to be replaced.

3.4.9 Strainer

This component could be required on old heating distribution systems made of steel or cast iron that could carry sediments and sludge. If such sediments accumulate at the bottom of the boiler it could be harmful to the heat transfer of the elements and generate premature failures.

3.4.10 Dual Energy piping

Piping connections between the two boilers can be made in parallel or in series as illustrated in fig. 7&8. When installed in parallel, a three way motorized valve (1"NPTF) is used to guide the heating system return water toward the auxiliary boiler or the BTH ULTRA electric boiler according to the operating mode in demand. This way, the oil or gas boiler is not maintained hot by the return water when the operation is in Electricity.

N.B.: Make sure to select the appropriate port A, B and AB when making the connection of the piping (see fig.8)

3.5 ELECTRIC CONNECTIONS

3.5.1 Main Electric supply

Boiler wiring and grounding must conform to the National Electrical Code and to state or local code requirements. The latter having precedence.

Wire gauge must be properly sized by a qualified electrician in such a way as to meet the national electrical code.

To do so, consult the boiler rating plate which will indicate the amperage drawn by the boiler at full capacity. Extra amperage will have to be added if external electrical equipment are connected to the boiler.

This value and the electrical code will be used to determine the electric cable required together with the appropriate breaker.

Many other factors must be taken into consideration in the selection of the appropriate electrical material such as the length and the type of cable used, the environment where the cable will be installed and the type of the over-current protection used.

Supply cables can be made of Aluminum or Copper and be rated for a minimum of 75ºC (165ºF).

If aluminum cables are used, it shall be of an adequate size (generally bigger) and particular consideration will have to be respected such as the use of DE-OX inhibitors in order to meet the National electrical code.

If the boiler electrical supply is on 208V, the position of wire terminal on the transformer connected to 240V will have to be changed to 208V.

The electrical supply can be done in two different ways depending on the necessity of supplying or not external accessories (such as a pump) at 120Vac.

Alternative #1: A 120VAC electrical supply is required to serve external accessories.

Models 12 to 24 kW

Electrical wiring must come from a 120/240 Vac/or 120/208Vac -1ph "L1-N-L2-" circuit protected by a properly sized breaker.

The main terminal block of the boiler is suitable for #14 to #00 copper or aluminum wires rated for 75°C (165°F) min.

Models 27 & 29

1. The main electrical supply comes from **two electrical supply circuits**

The electrical supply may come from two circuits at 240V or 208V/1ph/60Hz with one of the circuit having a neutral conductor.

The two circuits must be protected by a properly sized breaker (see table below giving the amperage drawn by the boiler on each terminal block) in conformity with local electrical codes.

Connections are made on the two main terminal block inside the boiler.

The boiler can then be operated at 50% of its nominal capacity when the breaker supplying the electric circuit connected to terminal block #2 is turned OFF during periods of low demand.

These terminal blocks are suitable for #14 to #00 copper or aluminum wires rated for 75°C (165°F) min.

2. The main electrical supply comes from **one electrical supply circuit)**

The boiler electrical boiler supply could come from only one circuit at 120/240 Vac or 120/208Vac 1ph/60Hz L1/N/L2 where the cable size will not exceed AWG#00.

All the factory connected wires to terminal block #2 will have to be transferred to terminal block #1.

Models	AMPERE @ 208/240 VAC/1ph	
	Terminal Block #1	Terminal Block #2
27	49/56 Amps	49/56Amps
	One terminal block 98/112A	
29	52/60 Amps	52/60 Amps
	One terminal block 104/120A	

Models 33 & 36

The electrical supply must come from two different electrical circuits. One circuit having three conductors 120/240V or 120/208V "L1/N/L2" and the other two conductors 240 or 208V "L1/L2".

Both circuits will need to be protected with appropriate breakers or fuse (see table below giving the amperage drawn by the boiler on each breaker) in conformity with local electrical codes.

Connections are made directly on the two breakers inside the boiler.
These breakers can receive copper or aluminum cable up to #1AWG..
The boiler can then be operated at approximately 50% of its nominal capacity when the breaker supplying the electric circuit connected to breaker #2 is turned OFF during periods of low demand.

Model Modèle	AMPERE @ 208/240 VAC/1ph	
	Breaker #1	Breaker #2
33	2 x 5 KW, 1 x 6 KW	2 x 6 KW, 1 x 5 KW
	57/66 Amps	61/70 Amps
36	3 x 6 KW	3 x 6 KW
	65/75 Amps	65/75 Amps

Alternative #2: <u>No</u> 120Vac electrical supply is required to serve external accessories (pump is supplied by a separate circuit outside the boiler)

The electrical supply is made the same way as described in alternative #1 excepting that it does not need the Neutral (N) conductor.

3.5.2 Electrical supply of External accessories

When the boiler is supplied with a 120V circuit, the total 120vac consumption of the boiler and external accessories must not exceed 5A.
The maximum electrical consumption of 24vac external accessories connected to R&C terminals must not exceed 15VA.
N.B.: The 24Vac supply of the boiler must not be mixed with another 24Vac external supply.

3.5.3 Outdoor temperature sensor

If you want the boiler target temperature to modulate according to the outdoor temperature (when the outdoor temp. will get colder, the target temp. will get higher). The supplied outdoor sensor will have to be connected to S1 S1 before turning the power on to the unit.
The installation of this sensor cancels the operation of the boiler when the outdoor temperature exceeds the selected value corresponding to the maximum temperature required for heating.

<u>1.Sensor location:</u>
-Outside the building at a location which best represents the heat demand of the building (a wall facing north for most of the buildings and on a south one on buildings with large windows facing south).
-It should not be exposed to external heat sources (dryer outlet, window openings, uninsulated walls).
-It should not be installed in a location where it could be covered with snow.

<u>2.Installation</u>:
-Drill a 9/64” dia. hole through the wall and insert the sensor cable.
-Fix the sensor cover to the wall using supplied screw.
-With an electric cable (100ft max.) having 2 conductors 20ga. connect one end of this cable to the sensor cable using twist-on wire connectors and the other end to terminals S1 & S1 of the boiler.

If you wish to operate the boiler at a fixed target temperature, simply do not connect the sensor before applying the power to the unit (do not put a jumper between S1&S1 if the outdoor sensor is not used).

3.5.4 Connecting the thermostat and pump.

Thermostat: Use a low voltage 24Vac thermostat designed for central heating system (do not use a 240Vac thermostat designed for electric baseboards).
Some thermostats are equipped with a temperature sensor for radiant floor application. The purpose of the thermostat is to give a signal to the boiler that there is a demand for heat. When the boiler will receive this signal, it will control the activation of the heating elements.
A two stage thermostat could also be installed. Then the second heating stage would be used to activate the “Boost” program allowing the boiler target to be gradually increased (see section 4.10).

Heating systems equipped with one thermostat and one pump:
With an 18gauge cable, connect the room thermostat directly to the following boiler terminals.
Two wire thermostat: Terminals “**R**” and “**W**”
Three wire thermostat: Terminals “**C**”, “**R**” and “**W**”
Using 14 gauge wires, connect the circulating pump directly on terminals “**P**” and “**P**
N.B. The amperage of the pump and 120Vac accessories must not exceed 5A or 1/6HP

Zoning applications with multiple pumps
Components shall be connected in such a way that when a thermostat is generating a heat demand, only the corresponding pump be operated and that

this heat demand is brought to the boiler in order to activate the elements.
To do so, you will need relays as illustrated below.
Boiler terminals **P-P** will not be used.

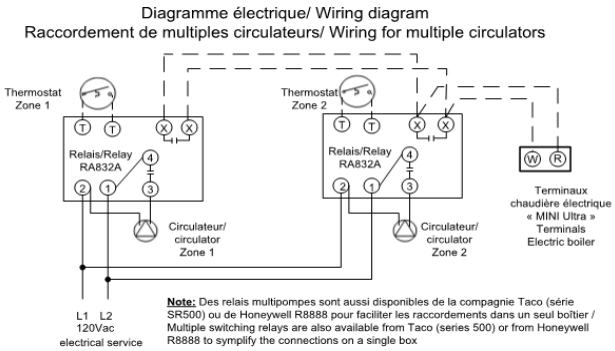

Figure 11 : Zoning with Multiple pumps

Zoning applications with motorized valves
Connect the end switch contact of all motorized valve to terminals **R** & **W** on the boiler.

Connect the circulator to terminals "**P**" and "**P**"- in the boiler.
The connection of the thermostats to their corresponding zone valve shall be done according to the zone valve manufacturer's instructions. See on fig.5 below a typical example.
The R & C terminals on the boiler can be used to supply 24Vac to the zone valves if the corresponding load does not exceed 20VA. Otherwise an external transformer will be required. Voltage at the outlet of the transformer shall never be under 24Vac.
N.B : The 24Vac supply of the boiler must not be mixed with another 24Vac external supply.

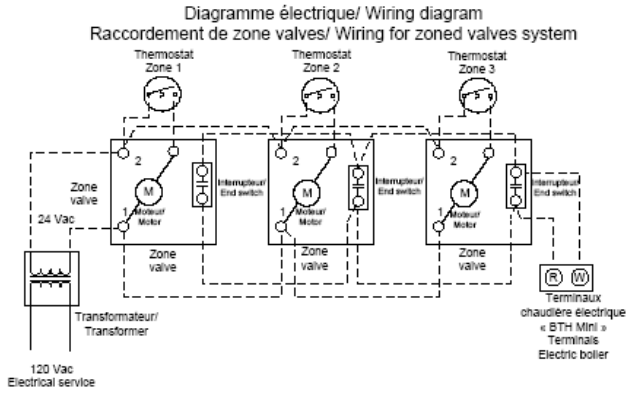

Figure 12 : Zoning with motorized valves

3.5.4 Dual-energy connection with an auxiliary boiler.

The BTH ULTRA boiler is designed to enable the installation on Dual-energy applications without the need to install an interface controller between the boilers and the electricity supplier authorization signal. Upon the reception of that signal (dry contact), the BTH ULTRA will select the appropriate heating mode and will activate the required boiler.
If the heating distribution system is equipped with only one pump connected to the **P P** terminals of the boiler, it will be activated on heat calls from the thermostat no matter the heating mode selected.
To allow the operation in dal-energy:

- Open the front access panel to the boiler electric compartment. Remove the screw at the bottom of the controller, raise the upper section of the controller. You will see a switch at the back of the controller having two positions "ELECT" and "Bi-Energ". Position the switch at "Bi-Energ"
- Install a 2 wire 18ga cable between the contact (N/F close contact to allow the operation in electricity, Red R wire and green V wire of Hydro-Quebec) of the external device making the selection of the operating mode and terminals **E1E2**
- **If the piping installation is made as shown on fig.7 without a three way valve:**
  Install an 18ga two wire cable between boiler terminals "**AUX**" and the **TT** terminals of the auxiliary boiler. The capacity of the **AUX** contact is 2A/24Vac max.
- **Do not connect the main electrical supply of the auxiliary boiler to AUX terminals**
- The auxiliary boiler target temperature will not be controlled by the electric boiler. It has to be controlled by its own operating and limit controller.
- See the operating sequence in Dual-energy at section 4.11.

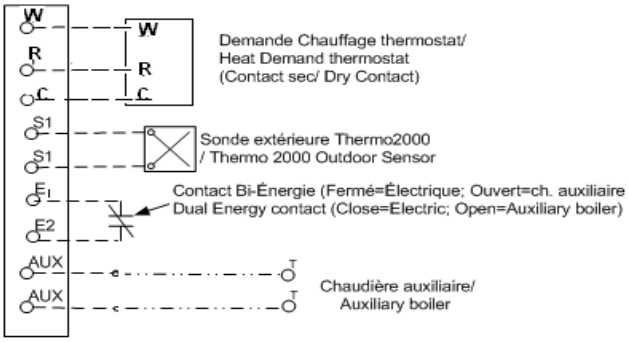

Figure 13 Connexions without three way valve

If the installation is made as shown on fig.8 then with a three way valve (in Option): Install a three wire 18ga cable between the valve and the electric boiler terminals. Following this, connect the end switch of the valve (grey and orange wire) to the T T terminals of the auxiliary boiler.The auxiliary boiler target temperature will not be controlled by the electric boiler. It has to be controlled by its own operating and limit controller.

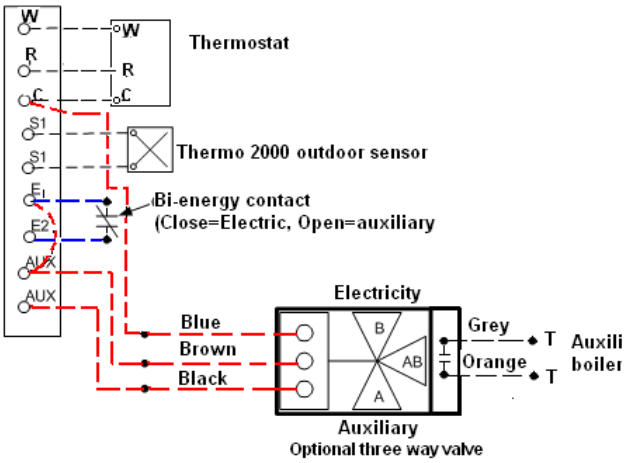

Figure 14 : Connexions with three way valve

3.5.5 Low-Water Cut-Off wiring

The BTH ULTRA boiler is equipped with 2 LWCO (low-water cut-off) terminals in order to installa an external LWCO as an extra safety feature depending on the installation needs or local requirements. If a LWCO is installed, simply remove the factory installed jumper and plug in the 2 wires coming from the LWCO to the LWCO terminals. See figures 13 and 14.

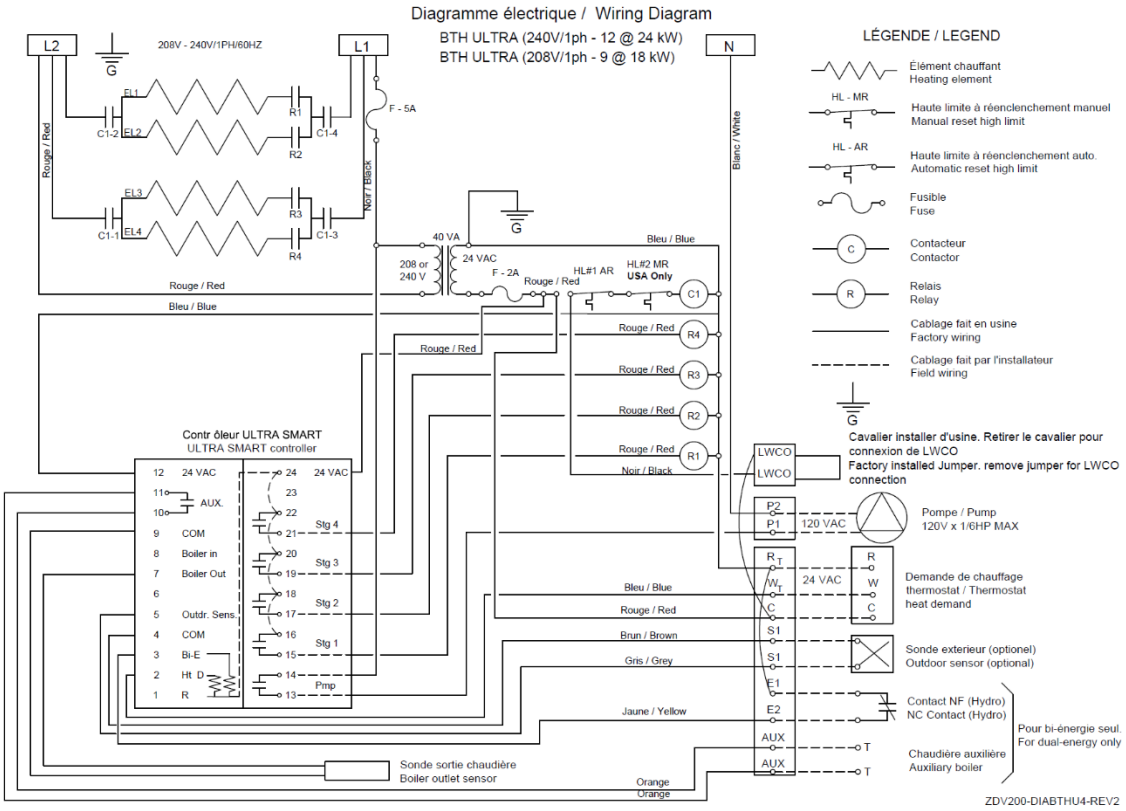

Figure 15 : Wiring diagram (12-24 KW)

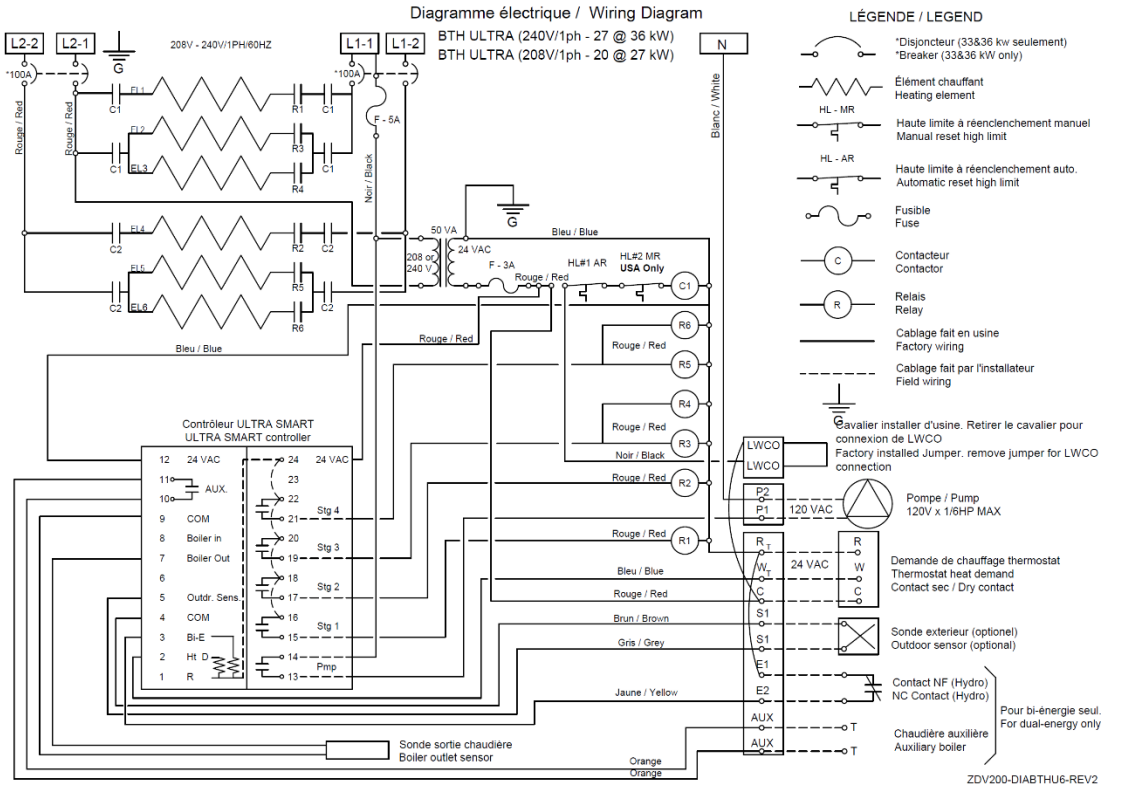

Figure 16 : Wiring diagram (27-36 KW)

Section 4: ADJUSTMENT OF THE CONTROLLER

4.1 INTRODUCTION

The BTH Ultra boiler is mainly designed to be installed on closed circuit applications where the water of the heating system flows directly from the boiler to the heating distribution system (Standard parallel Piping system)

Two operation modes are then offered:

- **Fixed boiler temperature set point (the outdoor sensor shall not be installed)**

Or

- **Outdoor reset**

4.2 DISPLAYED INFORMATION

The electronic control uses an LCD display to make all adjustments and to visualize the operation of the system.

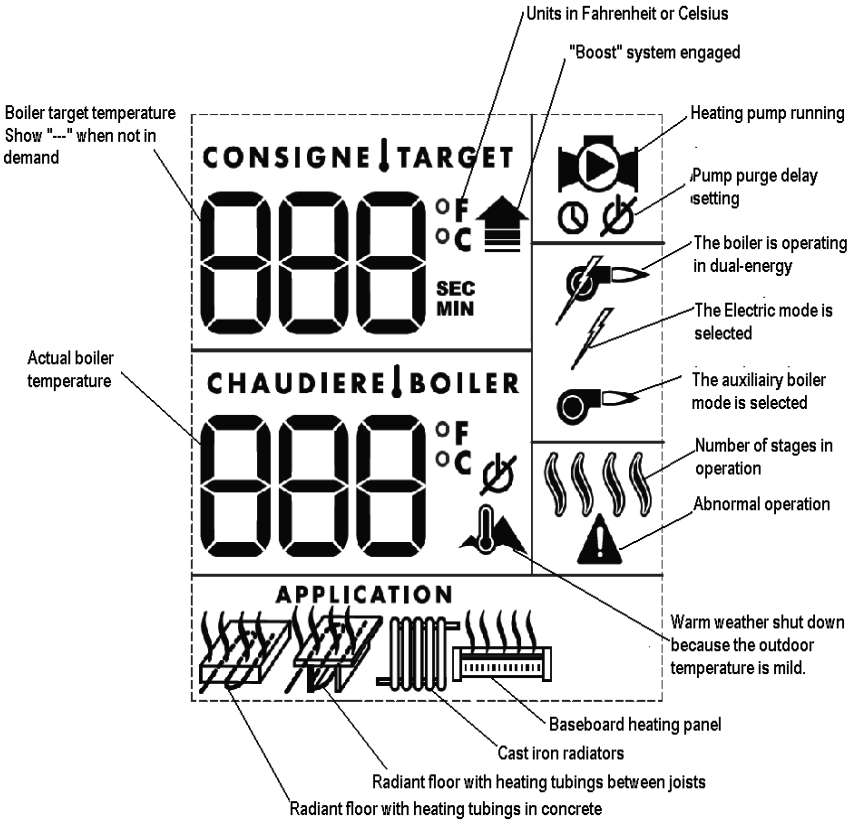

Figure 17 : UltraSmart Controller Display

4.3 OPERATION OF THE INTERFACE

The controller uses four push buttons at the bottom of the display to select and adjust the parameters.

The button is used to access the configuration menu and confirm a selection.

The + or - buttons are used to select an item or adjust a value.

The button enables the illumination of the display under two different modes.

The default mode will enable the illumination of the display for a period of 10 sec. each time a button is pressed. If the is pushed, the light will be continuously illuminated. Just press the button to change the mode of activation.

Figure 18 : UltraSmart Control Module

4.4 OPERATION IN "FIXED BOILER TEMPERATURE SET POINT"

For installation where the boiler target temperature shall be maintained at a fixed temperature that will not vary in relation to the outdoor temperature, the sequence of operation will be as follow:

On a call for heat from the room thermostat, the circulating pump will start and the boiler will activate the number of stages required to get to and maintain the outlet temperature of the boiler near the selected target temperature. A rotation of the stages based on an equal time period of operation is provided.

N.B. The supplied outdoor temperature sensor shall not be connected before applying the electrical power to the unit

4.5 OPERATION WITH "OUTDOOR RESET":

For installation where the boiler target temperature shall modulate in relation to the outdoor temperature; when the outdoor temperature gets colder, the boiler target temperature will increase.

On a call from the room thermostat, the circulating pump will start and the boiler will activate the number of stages required to get to and maintain the outlet boiler temperature near the target temperature established by the controller according to the outdoor temperature. A rotation of the stages based on an equal time period of operation is provided.

N.B. The supplied outdoor temperature sensor must be connected before applying the electrical power to the unit.

The boiler target temperature will be calculated by the controller in relation to the parameters selected in the menu 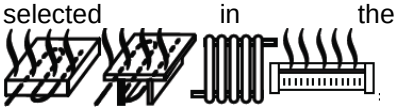 and the maximum target temperature required when the outdoor temperature will get to -10°F (-23°C). The "STD" curve corresponds to the default maximum temperature for a typical system and this value can be modified from the "MIN" to "MAX" value shown on the following tables.

The following tables show the values of the target temperature that will be obtained in relation to the outdoor temperature.

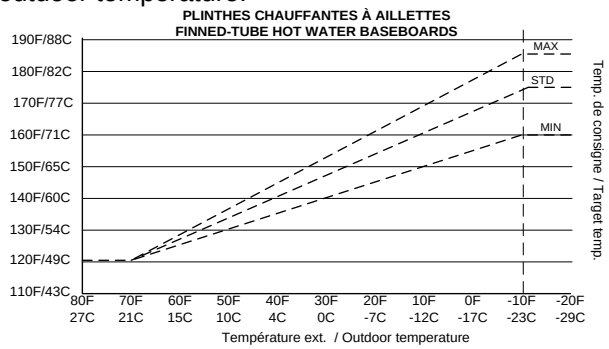

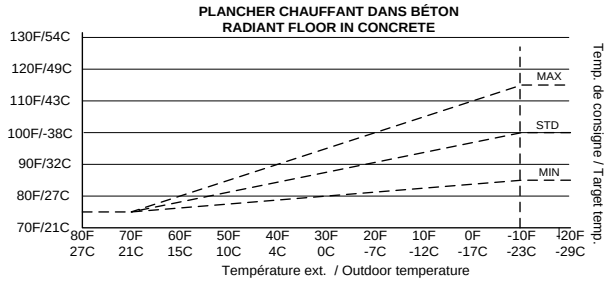

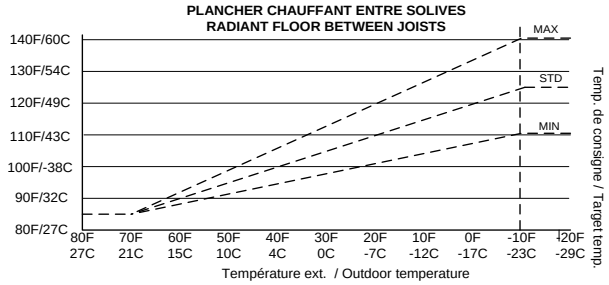

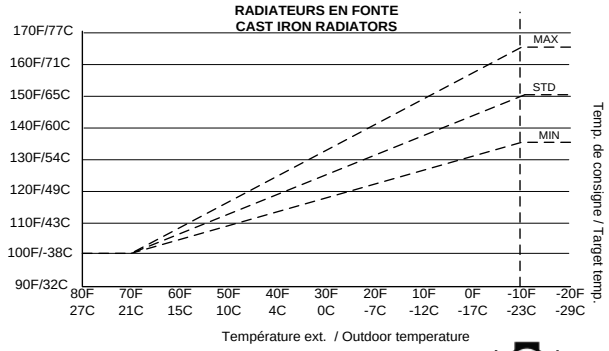

4.6 PURGE DELAY OF THE PUMP

The controller offers the possibility to stop the operation of the pump after an adjustable delay once the heat demand has been completed.

The following choices are offered:

- "OFF" The pump will stop immediately when the heat demand has been satisfied. This selection shall be selected on systems equipped with motorised fast closing zone valves in order to prevent noise from water hammering.
- "15 sec to 60 min" delay where the pump will be kept running to enable the pump to circulate water into the system to equilibrate the heat in all the building.
- "ON" The pump is in continuous operation. Required on particular heating distribution systems.

4.7 AUTOMATIC HEATING SHUT DOWN

When the outdoor sensor is installed and the unit then operates in the "outdoor reset" mode, the controller offers the user the possibility to automatically stop the boiler when the outdoor temperature reaches an adjustable value (0°F (-17°C) à 105°F (40°C). This characteristic is especially interesting on the following applications:

-Heating systems equipped with many thermostats where the user wants to prevent the operation of the unit if one of the thermostats has inadvertently been activated.

-Heating systems where the owner supplies heat to a lodger

-Systems connected to a geothermic heat pump where we do not want the electric boiler to be operating unless the outdoor temperature drops to a selected degree.

4.8 CONFIGURATION OF THE CONTROLLER

Since each type of heating distribution system is designed to operate at water temperatures that are particular to its operation, the proper configuration of the operating parameters of this particular system is important to maximize its performance.

In order to do this, the installer will first have to tell the controller if the application is in Dual-energy with an auxiliary boiler. The selection is made by selecting the position "Elect." Or "Bi-Energ" on the switch located at the back of the controller. This selection will have to be made before applying voltage to the unit. The default setting is "Elect."

Figure 19 : Back of the controller

This being done, the installer will have to access the configuration menu by pressing the button for 2 sec. until the first menu appears. The selection of the item or value is made by pressing the + or - buttons and confirming with the button to get to the next menu. See table 1 below to visualize the menu list that will gradually be displayed.
If the buttons remain untouched for a period of 10 sec., the controller will register the value of the selection made and return to the regular display position. It will also return to the regular display after reviewing all the operating parameters of the controller.

In case of a power failure, the parameters will be restored as they were established before the failure.

Table 5 below shows the presentation sequence of the menus.

Table 6: CONFIGURATION SEQUENCE OF THE MENU (Press on the button for 2 seconds)

ITEM	DESCRIPTION	RANGE	DEFAULT
°F °C	Choose the units the user prefers to work with	°F or °C	°F
	Select the type of heating system on which the boiler will be installed.	-Radiant Floor in concrete -Radiant Floor between joists -Cast iron radiator Hot water baseboards	
CONSIGNE | TARGET 145 °F	Adjust the maximum boiler target temperature required to adequately heat the building when the outdoor temperature is very cold.	-Radiant Floor in concrete 85°F to 115°F -Radiant Floor between joists 110°F to 140°F -Cast iron radiator 135°F to 165°F -Baseboard 160°F to 185°F	100°F 125°F 150°F 175°F
	Select the purge period that the pump will be running once the heat demand is completed. Select OFF if the heat system is equipped with electric zone valves.	OFF 15 sec. to 60min. ON	30sec

69°F	Select the outdoor temperature at which no heating of the building is required (the outdoor sensor has to be installed)	0°F à 105°F	75°F

Note 1: Once the operating parameters have been set, the controller will automatically come back to normal display screen. If the user needs to increase or decrease the target temperature, he can do it without having to enter in the configuration menu (see the following section).

4.9 ADJUSTMENTS OF THE TARGET TEMPERATURE BY THE USER:

By pressing the + or – buttons, the end user has the possibility to offset the programmed target temperature without going through the tool menus.
When the + or- button is pressed, the value “0” will appear and blink to show a “0” offset value from the original settings. When the + or- buttons are pressed again the offset value will change up to a value of + -10°F (5°C) from the original setting made in the configuration menu. The new value will blink during 5 sec. and the display will then go back to the standard view and the new target temperature will be shown.
Afterward, when the + or - buttons will be pressed, it will show the value of the offset made previously and can be re-adjusted.

OPERATION OF THE + - BUTTONS

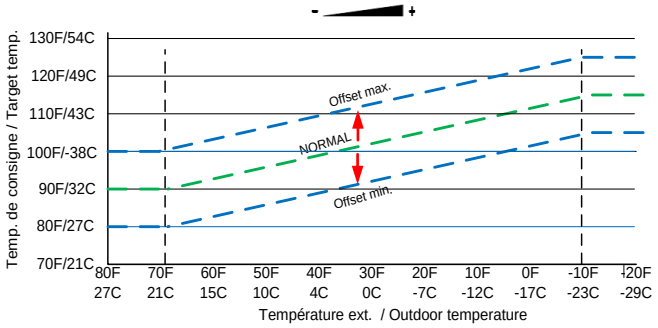

4.10 BOOST SYSTEM OPERATION

The controller incorporates a unique feature that enables the target boiler temperature to automatically be increased when the building heat load increases but cannot be fulfilled with the actual boiler target temperature and consequently the room thermostat(s) cannot be satisfied within a pre-determined period.
Example:
-Return to normal heat load after low demand periods occurring during sunny days.
-Long periods without heating which needs higher boiler temperature to recuperate.
-Return to normal room temperature after thermostat’s “night set back” program.

Three “Boost” operating options are available when the is pressed for 6 sec. The icon will appear and the three options **ON1, ON2** and **OFF** will be proposed. Press the + - button to select. The controller will register the selected item and will return to normal operation after 5 sec.

Operation in “Boost” Option ON1 (default setting)
The controller will engage the “Boost” program when the heat demand on terminals RW has been maintained for a pre-determined period according to the type of selected application. Once this period has been reached, the “Boost” icon will appear on the display and the boiler target temperature will start increasing very slowly over a pre-determined period and up to a pre-calculated maximum value until the heat demand applied on RW terminals has been completed.
On a new heat demand, the previous boost period is forgotten and the boiler target gets back to its original setting

Operation in “Boost” Option ON2 (only offered on installation not operating in Dual-energy)

The boost program is a marvellous feature that works fine on applications where the number of room thermostats is in limited quantity otherwise it may happen that during very cold periods the heat demand from all the thermostats may not become satisfied.
This option requires the installation of one or two stages heating thermostats. The second stage of the thermostat(s) will have to be connected to **E_1-E_2** of the boiler and the option ON2 selected.
Then the Boost mode will be instantaneously started increasing the target temperature when the signal from the second heating stage will be received. The target temperature will immediately start increasing.

« BOOST »
AUTOMATIC INCREASE OF TARGET TEMPERATURE

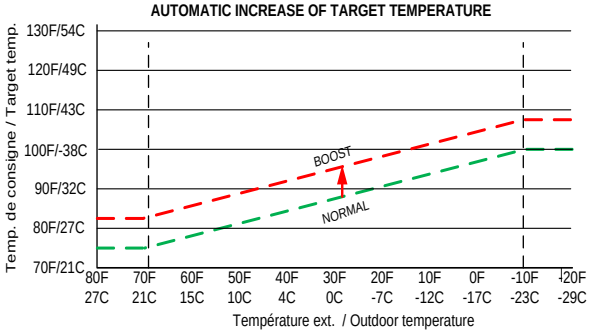

N.B. If the system is in “boost” most of the time, this means that the boiler target parameter established during “Setting procedure” would be too low for the heating system on which the unit is applied. This boiler

target could simply be gradually increased by pressing the + button or by re-setting the operating parameters using the tool menus .
The Boost menu can be cancelled by selecting “OFF” in the Boost menu.

4.11 OPERATION IN DUAL-ENERGY:

In Dual-energy mode, the display will indicate that this mode is active in showing the icon

If it is not shown, check the position of the switch located at the back of the controller. It must be set to “Bi-Energ” position.
N.B. The controller will have to be reset to register the new mode of operation. Just turn the power OFF and back ON to the unit.

Operation in Dual-energy with Electric
When the authorisation signal to operate in electricity is received, (close contact between **E_1&E_2**), the following icons will be shown.

The circulating pump and the heating elements will be activated according to the operating parameters established earlier.

Operation in Dual-energy with the auxiliary boiler
When the authorisation signal will be absent (open contact between **E_1&E_2**), the following icons will be shown.

Upon reception of a heat demand on terminals **R W** of BTH ULTRA boiler, terminals **P_1&P_2** will be energized at 120volts and the pump will be activated. At the same time, the contact will close on the “**AUX”** terminals to activate the auxiliary boiler. This boiler will be activated only when there will be a heat demand to the **R W** terminals and when the auxiliary boiler temperature will be lower than the settings of its own temperature controls.
If a three way valve is used on the piping as shown in fig.6, it will change position when the contact will close on AUX terminals and it will be the end switch of the valve that will give the signal to the auxiliary boiler to come on. The water flow will then circulate only in the auxiliary boiler.

Manual selection for the electricity or auxiliary boiler mode.
If the user wishes to manually select the electricity or auxiliary boiler operation, it can be done in following the sequence below:

- Push on the button for 6 sec. and the following icons will appear

The selection of the dual-energy or electric only or auxiliary boiler only is made with the + - button. Once the selection has been made it will be registered by pressing the or by waiting for 5sec.

If the electricity only or auxiliary boiler only has been selected, the corresponding icon and the icons will blink to advise the user that an unusual heating mode has been selected.

Section 5: START UP OPERATION

▲ SAFETY PRECAUTIONS

Before operating this boiler, be sure to read and follow these instructions, as well as the warnings printed in this manual. Failure to do so can result in unsafe operation of the boiler resulting in property damage, bodily injury, or death. Should you have any problems reading, following or difficulty in understanding the instructions in this manual, STOP, and get help from a qualified person.
Do not turn on the boiler unless it is filled with water. Do not turn on the boiler if the cold water supply shut-off valve is closed.

5.1 PREPARATORY STEP

- Make sure that all the piping and electrical connections have been made.
- Fill the boiler and the heating system with water.
- Check for leaks.
- Check the pressure reading at the temperature and pressure indicator. It should be around 12 psi.
- Turn On the electrical supply to the boiler with no heat demand from the thermostat(s).
- If the boiler is installed in dual energy, adjust the external device making the selection of the heating mode for an operation on Electricity (close contact between E1&E2).
- Completely eliminate all the air from the boiler and the distribution piping system. To do so, activate the circulating pump without the heating elements. If the pump is connected directly on **PP** terminals of the boiler, it can be activated by selecting “ON” in the configuration menu after having pressed for 2 seconds.
- Do not set the room thermostat at ON to avoid the operation of the heating elements.
- Adjust the UltraSmart boiler temperature controller as explained earlier and set the purge delay of the pump from On to its normal operation setting. The pump should stop.

5.2 STARTUP & INSPECTION

- Set the room thermostat ON to generate a heat demand.
- The pump shall start. The heating elements shall gradually come on and the boiler temperature will increase.
  N.B: A rapid activation of all the elements and external components can be done by pressing simultaneously the + and – buttons and maintaining the pressure on the buttons until all the components are operating
- Measure the amperage value drawn by the unit. It shall be around the value indicated on the boiler name plate.
- **Partially** close the isolating valve at the outlet of the boiler to reduce the water flow and consequently **slowly** increase the outlet temperature. The heating elements shall gradually stop as the temperature increases and gets near the target temperature.
- Lower the adjustment of the room thermostat(s). The heating elements shall stop and the pump shall stop after the delay set on the controller.
- Check the pressure reading on the gauge of the unit. It should not be higher than 28 psi when the distribution system will get to its maximum operating temperature.

5.3 COMPLEMENTARY CHECKS ON DUAL-ENERGY INSTALLATIONS

- Check the proper operation of the external authorization signal to operate on electricity or auxiliary in simulating the operation of the signal (open or close contact) on E_1 and E_2. Verify the change of the operating mode.
- Check the operating sequence in the “AUX” mode as decrribed in section 4.11 of the manual.
- Adjust and check the operation of the auxiliary boiler.

N.B. On initial startup it may take a considerable amount of time before the water reaches the target temperature Further adjustments may be necessary as you use your boiler and the space heating system.

Section 6 MAINTENANCE

6.1 INTRODUCTION

Properly maintained, your boiler will provide years of dependable, trouble free service. It is recommended that a regular routine maintenance program be established and followed by the user. Components are subject to eventual failure that requires service. Failure to use the correct procedures or parts in these circumstances may make the unit unsafe or reduce the life of the boiler.

The owner should have the following inspection and maintenance procedures performed:

6.2 AT ALL TIMES

An immediate inspection shall be made if:

- An odor of melted plastic or overheated material is detected
- A leak coming from the unit or the heating system is observed

If a leak is detected at the outlet of the safety relief valve, it could be related to a problem with components installed on your heating distribution system. A quick correction is then required.
Do not plug the outlet of this valve if a dripping condition occurs.

6.3 TWICE A YEAR

- Check for the proper operation of the automatic air purger(s) and eliminate air from the radiators.

6.4 ANNUALY

⚠ WARNING

Make sure that the power on the unit has been turned off before opening the electrical compartments of the boiler.

It is recommended that a visual inspection be made on the electrical compartments of the boiler to check the water tightness of the gasket on the element flange and also check for any signs of overheating of the components and wires. At the beginning of the heating season, check the proper operation of the operating/safety controls, circulating pump and heating distribution system components. Required corrections should be made as soon as possible. Parts used for replacement shall be the same as the original equipment.

- Open the boiler drain valve to eliminate deposits that could have settled at the bottom of the boiler. Stop when water gets clear. If there is no flow or a very small flow, it could be due to a large accumulation of deposits at the bottom of the unit. If so, close the isolating valves at the inlet and outlet of the boiler, remove heating element(s) and clean the inside of the tank with a strong jet of water
- If the system piping includes a strainer to collect sediments from the heating distribution system, it must be clean.
- If the installation includes an auxiliary boiler, have it checked by a qualified technician.

Section 7- TROUBLE SHOOTING

7.1 TROUBLE SHOOTING TABLE

PROBLEM	CAUSES	SOLUTION
The display shows **---** in “TARGET TEMP”	-There is no heating demand when the outdoor sensor is used and the icon is shown, the outside temperature is above the boiler shut down setting. -The switch located on the back of the controller is set to “Bi-Energ” and the icon is shown.	-Generate a heat demand -Temporarily increase the value of this setting on the controller configuration. -Set the switch to “Elect”
The display shows **“Er1”** and the icon is displayed.	The controller is not detecting the presence of the outdoor sensor.	-Make sure that the sensor cable connected to the unit is not in short or open circuit. Do not install a jumper between S1-S1 when the sensor is not required. -Check the resistance value (ohms) of the sensor. It should correspond to the value shown on the table below otherwise it should be replaced. Check for proper connection of the wires inside the boiler connected to S1S1 and at the controller terminals.
The display shows “**Er2**” and blinks	The controller is not detecting the presence of the boiler temperature sensor.	-Check the state of the sensor located in the immersion well located at the top of the elect. element compartment. --Check the resistance value (ohms) of the sensor. It should correspond to the value shown on the table below otherwise it should be replaced.
Stage 2 is ON but not Stage 1	There is no problem. A rotation of the stages is provided to allow an equal time of operation of the stages	
When stage 3 or 4 comes ON, stage 1 or 2 comes OFF	This sequence is normal on boilers from 27 to 33kW since stage 2 and 3 activate two elements. Stage 1 or 2 is disactivated to obtain an equal increase of capacity of the boiler.	
The boiler target temperature does not change when the outdoor temperature varies	The outdoor sensor has not been detected when the power has been applied to the unit.	Check the connection of the outdoor sensor to terminals S1S1. Turn OFF the power to the unit for 5 sec. and set it back ON.
The controller shows that the heating stages are ON but the heating elements do not heat.	The main contactor inside the unit is not activated. There is no 24Vac at his coil.	The contact of the hi limit temp. control (automatic reset or manual reset in some models) is open. Reset the control and check for proper operation**.**
The boiler water temperature at the outlet of the unit “BOILER T⁰”does not get to the “BOILER TARGET T⁰”	-The room thermostat is not in constant demand.	-Adjust the thermostat anticipator (If available) to obtain longer operating cycles

	-Some heating elements are defective -The total capacity of the boiler is expelled to the heating distribution system at this temperature.	-Replace defective elements -If a higher boiler water temperature is required to satisfy the heat demands of the thermostats, a boiler having a larger capacity is required.
Boiler stays in demand even when the thermostat is not in demand. (Systems with more than one thermostat)	-On systems with electric zone valves, one or many end switches included in the valve is defective. -A jumper has been installed on terminals TT of the boiler	-Change defective “end switch”. -Make appropriate connections as shown in fig.7
An overheated plastic odour is released from the boiler	Turn the power OFF to the boiler. Open the front and left side panel of the boiler. Check the components and electric wires for indications of overheating.	Replace overheated components and check supply voltage to the boiler.
Boiler safety valve is leaking	-Pressure reading at the indicator shows a pressure above 28psi -Pressure is below 28psi	-The pressure regulator on the distribution system is defective or the expansion tank is too small or defective. -Replace the safety valve

Table 7: Resistance value of the outdoor sensor vs outdoor temperature

Temperature		Resistance	Temperature		Resistance	Temperature		Resistance	Temperature		Resistance
°F	°C	Ω	°F	°C	Ω	°F	°C	Ω	°F	°C	Ω
-50	-46	490,813	20	-7	46,218	90	32	7,334	160	71	1,689
-45	-43	405,71	25	-4	39,913	95	35	6,532	165	74	1,538
-40	-40	336,606	30	-1	34,558	100	38	5,826	170	77	1,403
-35	-37	280,279	35	2	29,996	105	41	5,21	175	79	1,281
-30	-34	234,196	40	4	26,099	110	43	4,665	180	82	1,172
-25	-32	196,358	45	7	22,763	115	46	4,184	185	85	1,073
-20	-29	165,18	50	10	19,9	120	49	3,76	190	88	983
-15	-26	139,402	55	13	17,436	125	52	3,383	195	91	903
-10	-23	118,018	60	16	15,311	130	54	3,05	200	93	829
-5	-21	100,221	65	18	13,474	135	57	2,754	205	96	763
0	-18	85,362	70	21	11,883	140	60	2,49	210	99	703
5	-15	72,918	75	24	10,501	145	63	2,255	215	102	648
10	-12	62,465	80	27	9,299	150	66	2,045	220	104	598
15	-9	53,658	85	29	8,25	155	68	1,857	225	107	553

7.2 SPARE PARTS

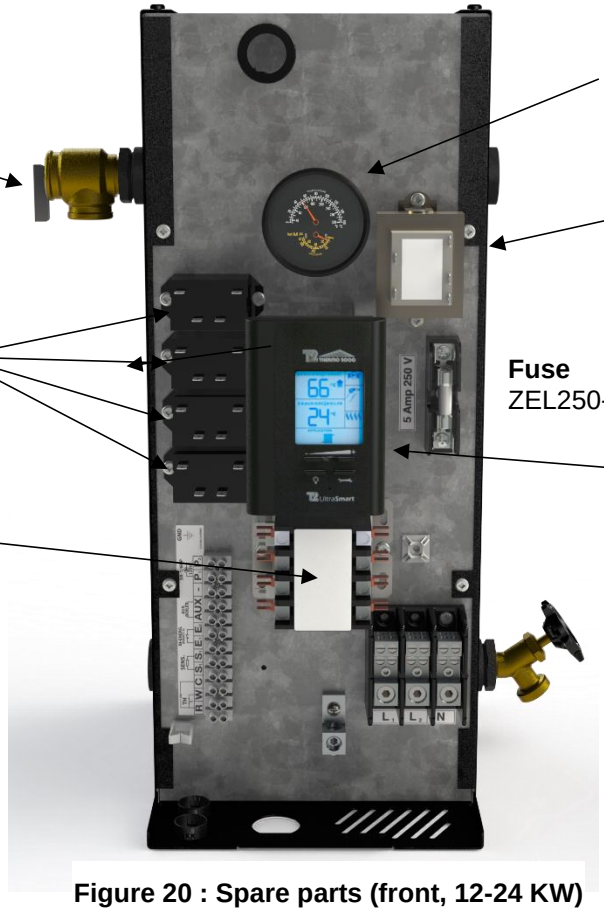

Figure 20 : Spare parts (front, 12-24 KW)

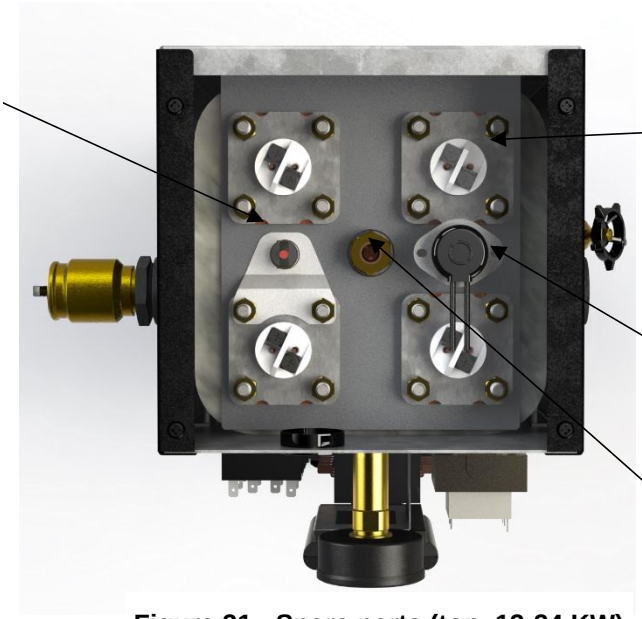

Figure 21 : Spare parts (top, 12-24 KW)

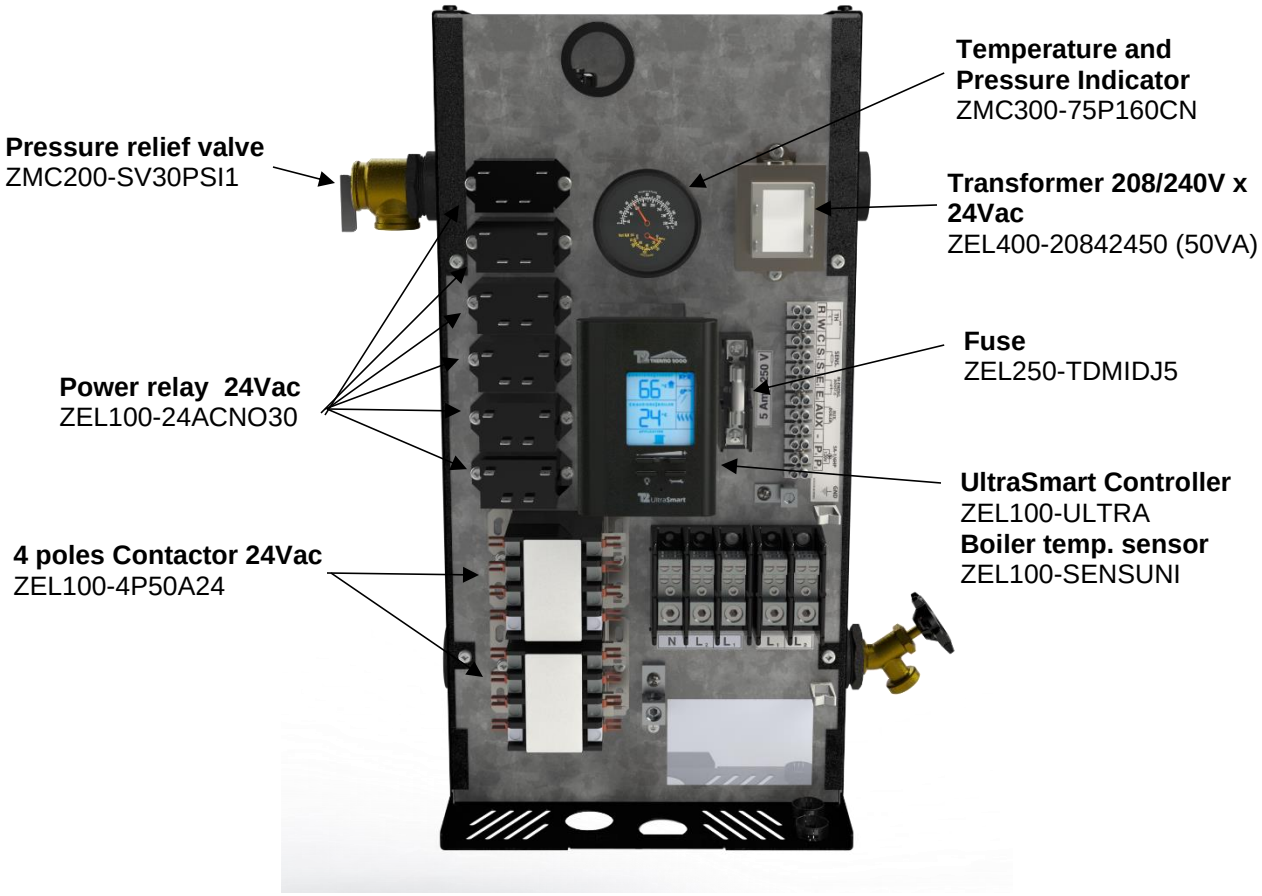

Figure 22 : Spare parts (front, 27-29 KW)

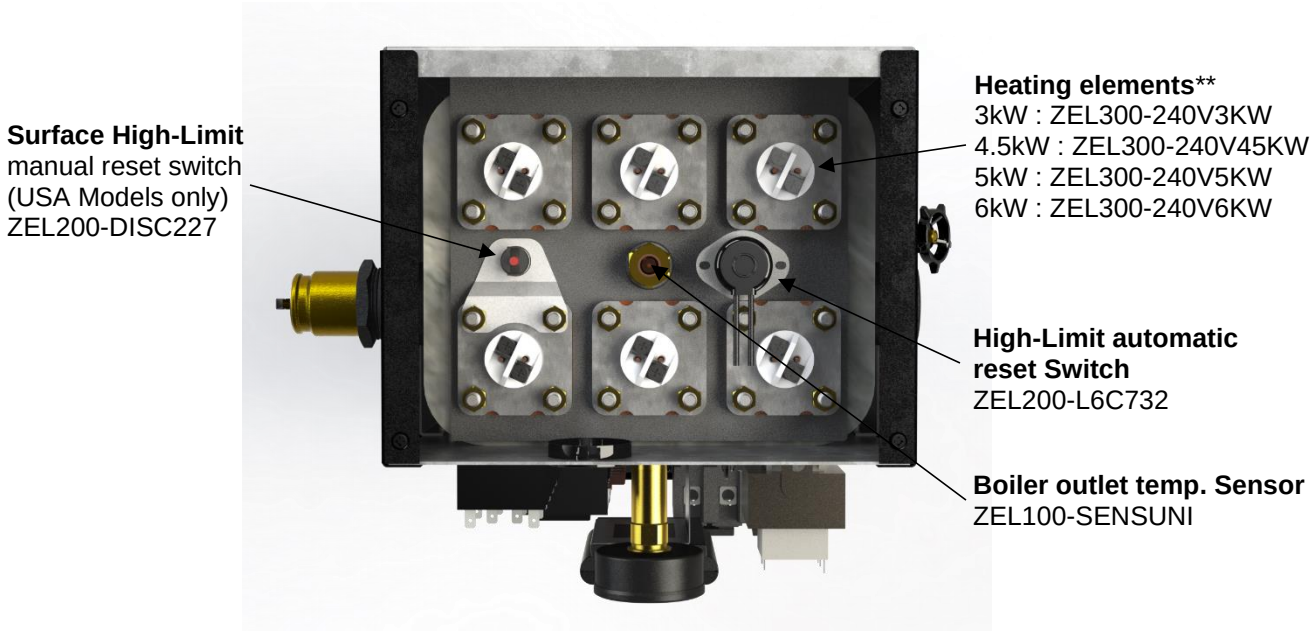

Figure 23 : Spare parts (top, 27-36 KW)

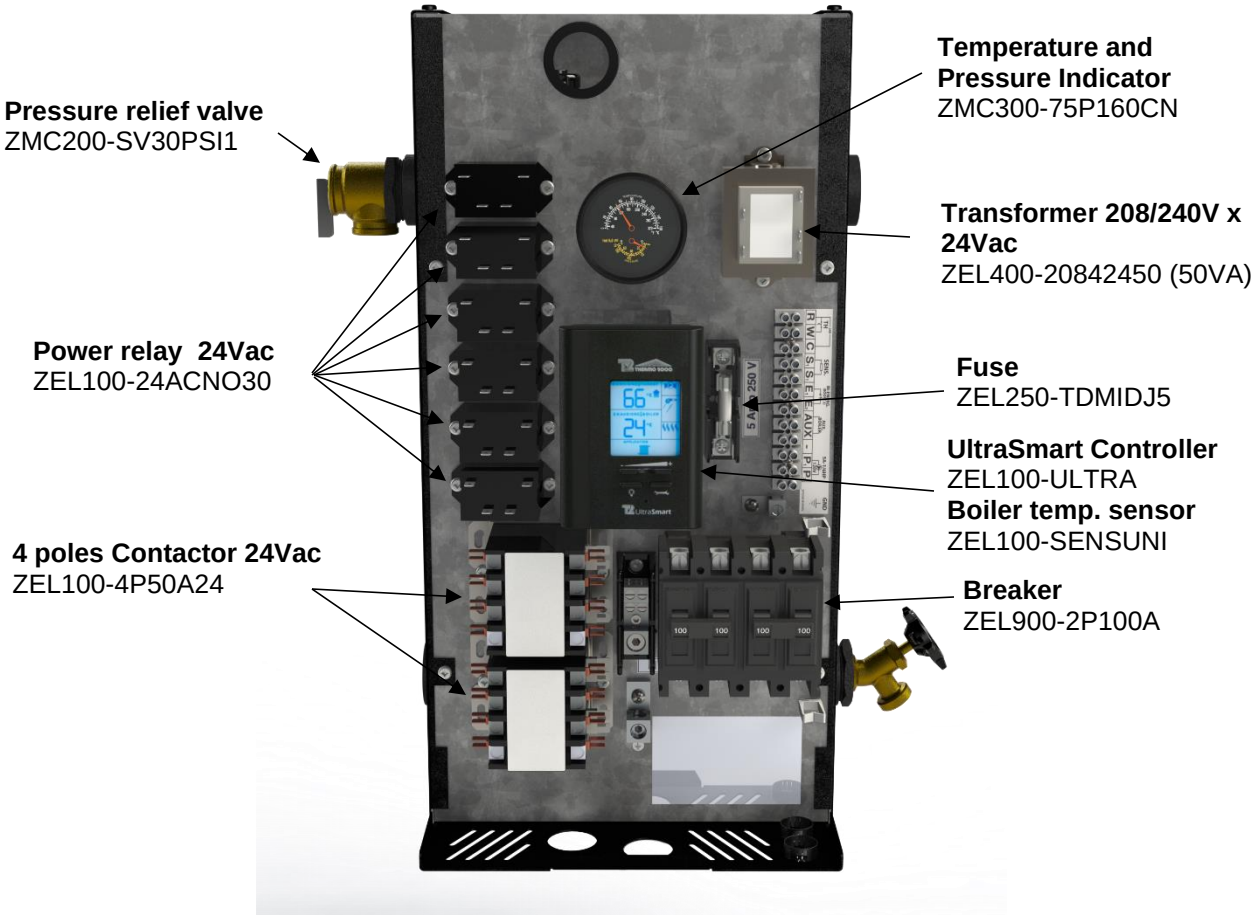

Figure 24 : Spare parts (front, 33-36 KW)

BTH ULTRA LIMITED WARRANTY

Warranty Coverage on the tank.

Thermo 2000 Inc. hereby warrants that the **BTH ULTRA** tank on normal use and service will not leak for a period of fifteen (15) years from the date of purchase. The warranty is valid as long as the original residential purchaser owns the building in which the unit was originally installed. In the event that a leak should occur within this limited warranty period due to defective material or workmanship, such leak having been verified by an authorized company representative, Thermo 2000 inc. will repair or replace at our sole discretion the failed unit with the nearest comparable model at the time of replacement.

The original residential purchaser is responsible for all costs associated with the removal and reinstallation, shipping and handling to and from the manufacturing plant. The replacement unit will be warranted for the remaining portion of time of the original Warranty.

Warranty coverage on parts

All **BTH ULTRA** components & parts are warranted for a period of two (2) years against defects due to defective material or workmanship. The original purchaser is responsible for all costs associated with the removal and reinstallation, shipping and handling to and from the Manufacturer. The components, repaired or replaced are warranted for the residual period of time of the initial warranty on the parts.

Exclusions

This warranty is void and shall not apply if:

A) Defects or malfunctions resulting from installation, repair, maintenance and/or usage that are not done in conformity with the manufacturer's installation manual.

B) Defects or malfunctions resulting from installation, maintenance, or repair that are not done in accordance with regulations in force.

C) Defects or malfunctions resulting from improper installation, maintenance or repair done carelessly or resulting from consumer damage (improper maintenance, misuse, abuse, accident or alteration).

D) Installation in which a relief valve (pressure) is not installed or if it is not functioning properly, or when it is not connected to a drain to avoid damage to the property.

E) Installation in which liquid circulating in the tank does not remain in closed circuit or installation in which piping is leaking or on systems with polybutylene pipes or other having no oxygen absorption barrier.

F) Installation where the acidity of water is not within the normal Environmental Protection Agency (EPA) (between pH 6.5 – 8.5) guidelines or the domestic water contains abnormal levels of particles matter or water exceeding 10.5 gpg.

G) The **BTH ULTRA** unit has been subjected to non-authorized modifications.

H) Defects or malfunction resulting from storing or handling done elsewhere than Thermo 2000's manufacturing plant.

I) Units on which the serial number is removed or obliterated.

Limitations

Thermo 2000 Inc. shall not be responsible for any damage, loss, and inconvenience of any nature whatsoever, directly or indirectly, relating to the breakdown or malfunction of the unit. This warranty limits its beneficiary's rights. Nevertheless, the beneficiary may have other rights, which vary from jurisdiction to jurisdiction.

This warranty replaces any other expressed or implicit warranty and constitutes the sole obligation of Thermo 2000 Inc. towards the consumer. The warranty does not cover cost of removal, reinstallation or shipping to repair or replace the unit, nor administration fees incurred by the original consumer purchaser.

Thermo 2000 Inc. reserves its rights to make changes in the design, construction, or material, as in its judgment constitute an improvement of former practices.

This warranty is valid only for installations made within the territorial limits of Canada and the United States.

Warranty service procedure

Only authorized **BTH ULTRA** dealers are permitted to perform warranty obligations. The owner or his contractor must provide Thermo 2000's head office or authorized depot with the defective unit together with the following information: **BTH ULTRA** model and serial number, copy of the original sales receipt and owner's identification certificate.

THERMO 2000 INC.

500, 9ième Avenue, Richmond (Qc) Canada J0B 2H0
Tel: (819) 826-5613 Fax: (819) 826-6370
www.thermo2000.com