Electric Boilers

MINI BTH

Models from 3 kW to 12 kW : 208/240V single phase

INSTALLATION & OPERATING MANUAL

Your *MINI BTH* Electric Boiler has been carefully assembled and factory tested to provide years of trouble-free service. The following information and safety measures are provided to enable proper installation, operation, and maintenance of this product.

It is imperative that all persons who are expected to install, operate or adjust this boiler should read these instructions carefully.

The accessories included with the boiler are shipped within the accessories box.

Any questions regarding the operation, maintenance, service or warranty of this electric boiler should be directed to the supplier.

When all installation steps have been completed, keep this installation manual in a safe place (close to the boiler) for future reference.

THERMO 2000 Inc.
Printed In Canada

Revision: May 2025

Table of contents

Section 1: TECHNICAL SPECIFICATIONS *3*
Table 1: Ratings & Specifications at 208 & 240 Vac / 1ph[1] 3
Table 2 : Boiler connections and dimensions 3
Section 2: INTRODUCTION *4*
2.1 LOCAL INSTALLATION REGULATIONS 4
2.2 CORROSIVE ENVIRONMENT 4
2.3 INSPECTION UPON RECEPTION 4
2.4 TO BE CHECKED 4
Section 3 : INSTALLATION *5*
3.1 SAFETY MEASURES 5
3.3 CLEARANCE 5
Table 3: boiler clearances 5
3.4 PIPING INSTALLATION 6
3.4.1 Pressure loss 6
3.4.2 Boiler water connections 7
3.4.3 Flow check valve 8
3.4.4 Pressure relief valve 8
3.4.5 Expansion tank 8
3.4.6 Water pressure regulator 8
3.4.5 Air eliminator 8
3.4.7 Circulating pump 8
3.4.8 Drain valve 8
3.4.8 Strainer 8
3.5 ELECTRICAL CONNECTIONS 9
3.5.1 Main boiler supply 9
3.5.2 Electrical supply of External accessories 9
3.5. Thermostat(s) and pump(s) connections 9
Section 4: START UP OPERATION *12*
4.1 PREPARATORY STEP 12
4.2 TEMPERATURE CONTROL ADJUSTMENT 12
4.3 INSPECTION AFTER STARTUP 12
Section 5: MAINTENANCE *13*
5.1 INTRODUCTION 13
5.1.1 At all times 13
5.1.3 Annually 13
5.2 REPLACEMENT PARTS 14
MINI BTH LIMITED WARRANTY *15*

Figure 1 : Dimensions 3
Figure 2 : Mounting positions 6
Figure 3 : Pressure drop diagram 6
Figure 4 : Typical installation on radiant heating floor 7
Figure 5 : Typical installation on high temperature application 7
Figure 6 : Zoning with multiple pumps 10
Figure 7 : Zoning with Motorized valves 10
Figure 8 : Wiring diagram (3-9 KW) 11
Figure 9 : Wiring diagram (12 KW) 11
Figure 10 : Replacement parts (Front) 14
Figure 11 : Replacement parts (top) 14

Section 1: TECHNICAL SPECIFICATIONS

Table 1: Ratings & Specifications at 208 & 240 Vac / 1ph[1]

MINI BTH	Capacity (KW)		Amps[2]		Electric element(s) (240 V)	Stages	Suggested size at 240V/1ph.[3]		
							Cable		Breaker (Amp.)
	208 V	240 V	208 V	240 V			Cu	Al	
3	2.2	3	10.9	12.5	1 x 3 KW	1	12	10	20
4.5	3.4	4.5	16.3	18.9	1 x 4.5 KW	1	10	10	30
6	4.5	6	21.8	25.0	1 x 6 KW	1	8	6	40
7.5	5.6	7.5	27.2	31.2	1 x 3 KW + 1 x 4.5 KW	2	8	6	40
9	6.7	9	32.6	37.5	2 x 4.5 KW	2	8	6	50
12	9	12	43.5	50.0	2 x 6 KW	2	6	4	70

- [1] Electrical supply 120/240V or 120/208V – 1ph (L1-N-L2) with three conductors and a ground **or** a supply with two conductors 240V or 208V – 1ph (L1-L2) with a ground if the application does not require a 120V electrical supply for external accessories such as a pump, etc
- [2] Add the amperage of the circulating pump and other external accessories if they are connected to the boiler (max. 15A).
- [3] A higher cable size could be required. In all cases the local electrical code has priority. The electrician has the responsibility to select the appropriate size.

Table 2 : Boiler connections and dimensions

Connections	
Inlet/Outlet	3/4 “ NPT Fem
Safety valve	3/4 “ NPT Fem
Draining valve	3/4 “ NPT Fem
Shipping weight	47 lbs

Item	Dimension (inches)
A	21-1/2
B	8-7/8
C	8-3/4
D	3-1/4
E	2-1/2
F	15
G	5
H	9-3/4
I	20

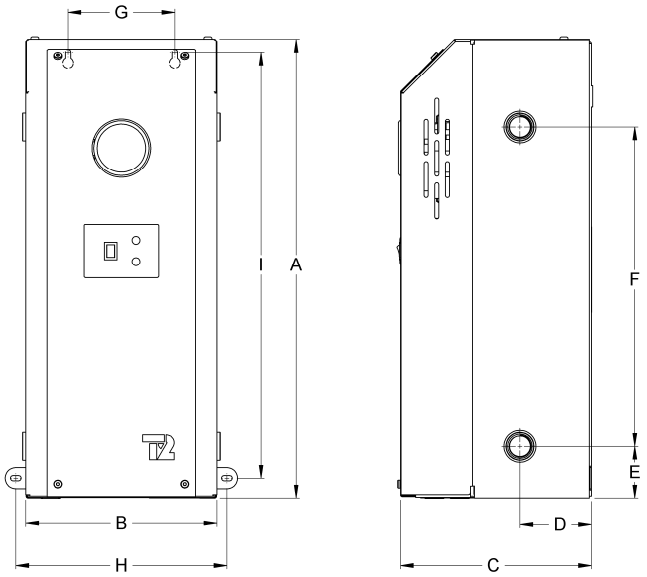

Figure 1 : Dimensions

Some provinces or states, may require boilers built in conformity to ASME standards. If such models are required, model with an “H” suffix shall be used.

General Safety Precautions

Be sure to read and understand the entire Installation & operation manual before attempting to install or to operate this water heater. Pay particular attention to the following General Safety Precautions. Failure to follow these warnings could cause property damage, bodily injury or death. Should you have any problems understanding the instructions in this manual, STOP, and get help from a qualified installer or technician.

Section 2: INTRODUCTION

WARNING

These important safeguards and instruction appearing in this manual are not meant to cover all possible conditions and situations that may occur. It should be understood that common sense, caution and care are factors which cannot be built into every product. These factors must be supplied by the person(s) caring for and operating the unit.

2.1 LOCAL INSTALLATION REGULATIONS

This electric boiler must be installed by a qualified installer that is certified to install electric boilers in the province or state at the moment of the installation. The electric boiler must be installed in accordance with the instructions in this manual and in conformity with local codes. In the absence of local codes, the installation must respect the current edition of the National Plumbing Code and the National Electric Code. In any case where instructions in this manual differ from local or national codes, the local or national codes take precedence.

2.2 CORROSIVE ENVIRONMENT

The electric boiler must not be installed near an air duct supplying corrosive atmosphere or with high humidity content.
When a boiler defect is caused by such conditions, the warranty will not apply.

2.3 INSPECTION UPON RECEPTION

Inspect the electric boiler for possible shipping damage. The manufacturer's responsibility ceases upon delivery of goods to the carrier in good condition. Consignee must file any claims for damage, shortage in shipments, or non-delivery immediately against carrier.

2.4 TO BE CHECKED

Please check the identification tag on the unit to make sure you have the right model (Capacity in kilowatt, voltage, number of phase).

List of components shipped with the unit:

- **Pressure relief valve set at 30 psi.**
- **Drain valve.**
- **Temperature & pressure indicator**
- **Installation and operating manual**

Section 3 : INSTALLATION

WARNING

The manufacturer's warranty does not cover any damage or defect caused by installation, or attachment, or use of any special attachment other than those authorized by the manufacturer into, onto, or in conjunction with the boiler. The use of such unauthorized devices may shorten the life of the boiler and be dangerous. The manufacturer disclaims any responsibility for such loss or injury resulting from the use of such unauthorized devices.

3.1 SAFETY MEASURES

All installation will include the supplied pressure relief valve which limits the maximum operating pressure to 30 psi (207 kPa).

This electric boiler is designed to be installed on a circuit operated between 50°F to 190F (10C to 90C) and at a maximum operating pressure of 30psi (207kPa). The unit in designed solely to be used on a close loop hydronic heating system. The heat transfer solution must be a solution of water or a mix solution Water/Glycol having a maximum glycol concentration of 50%. The boiler high limit temperature control is set at a fixed temperature of 210F 99C). If the heating distribution system on which the boiler is installed requires a high limit controller having a lower setting, this controller will be added to the system and connected in series with the factory installed limit control.

3.2 LOCATION

The electric boiler should be installed in a clean, dry location. Long hot water lines should be insulated to conserve water and energy. The electric boiler and water lines should be protected from exposure to freezing temperature.
The boiler can be mounted vertically or horizontally directly on a solid surface with 4 adequate screws inserted in the provided boiler openings. Make sure it is properly leveled.
The electric boiler must be located or protected so as not to be subject to physical damage, for example, by moving vehicles, area flooding, etc.
All models can be installed directly on a combustible wall and into an alcove. The location must have sufficient ventilation to maintain an ambient temperature not exceeding 90F (32C).

CAUTION

The electric boiler should not be located in an area where leakage of its tank or water connections will result in damage to the adjacent area or to lower floors of the structure. When such areas cannot be avoided, install a suitable drain pan or non-flammable catch pan under the unit to collect the water. The pan must be connected to a drain.
NOTE: Auxiliary catch pan MUST conform to local codes.

3.3 CLEARANCE

For adequate inspection and servicing the following minimum clearance is necessary:

Table 3: boiler clearances

Sides	3 inches
Electric elements side	14 inches
Front side of the boiler	3 inches*
Back	0 inch

*If the boiler is installed in a closed compartment, allow an access service opening and adequate ventilation to maintain an ambient temperature lower than 90F/32C.

3.4 PIPING INSTALLATION

The inlet and outlet piping of the boiler must be in conformity with the different configurations shown below. Make sure that the fluid flows is in the proper direction.

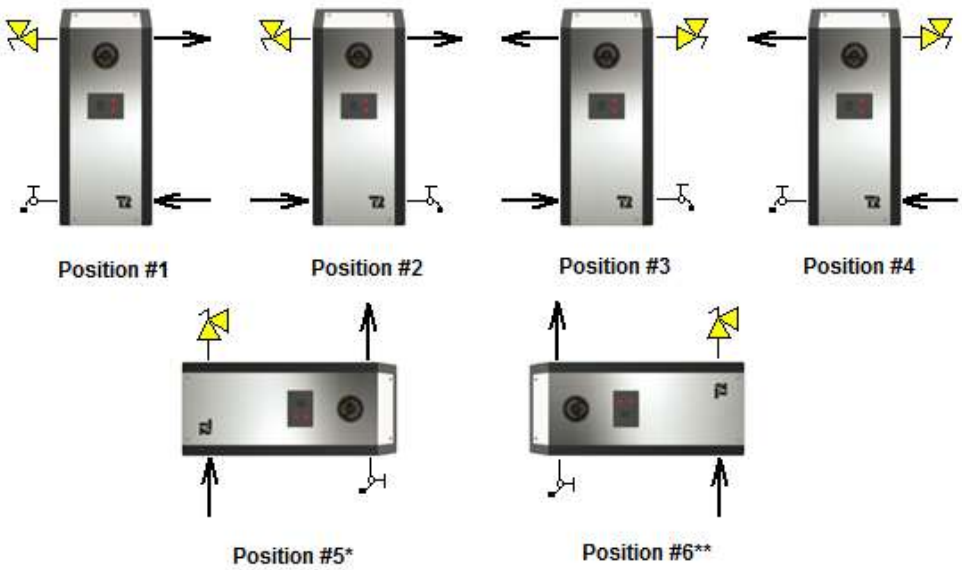

*In position #5: on boilers MINI BTH 3 to 6kW, the heating element located in the upper section of the boiler must be relocated into the lower opening.
**In Position #6: the temperature setting of elements #1 must be adjusted at a temperature slightly higher than the one of element #2.

Figure 2 : Mounting positions

3.4.1 Pressure loss

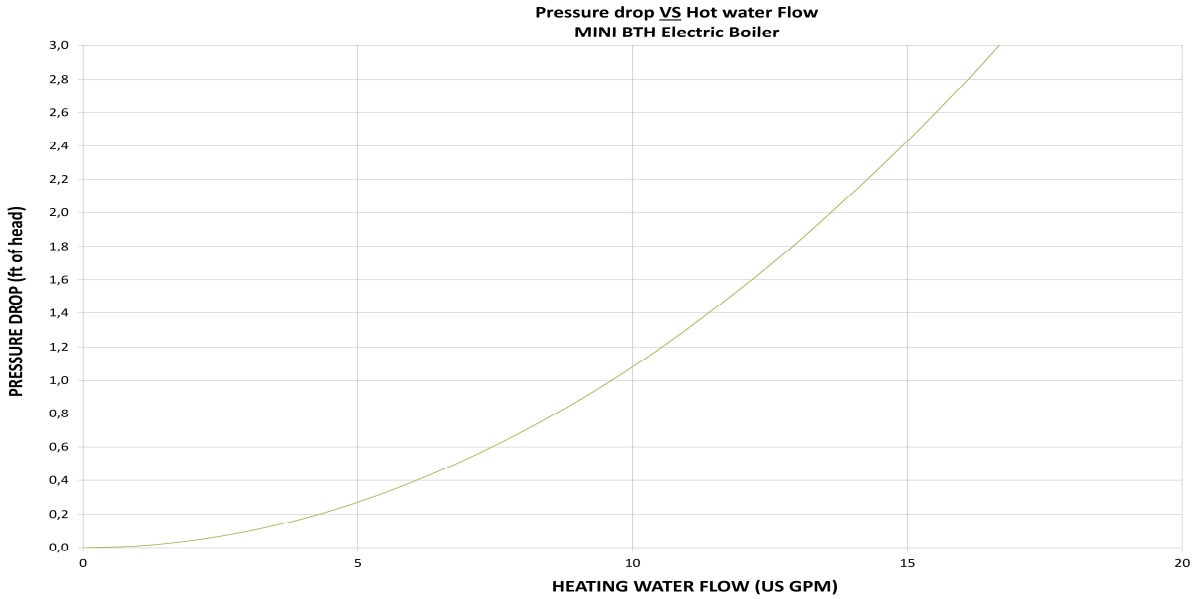

Figure 3 : Pressure drop diagram

3.4.2 Boiler water connections

Make sure you connect the accessories and the piping to the proper connection fittings as indicated at figure 2 above and according the selected mounting position.

Figure 3 below shows typical connections of a MINI BTH 2.0 boiler to a radiant floor heating system. The location of the distribution system components may be different from what is represented.

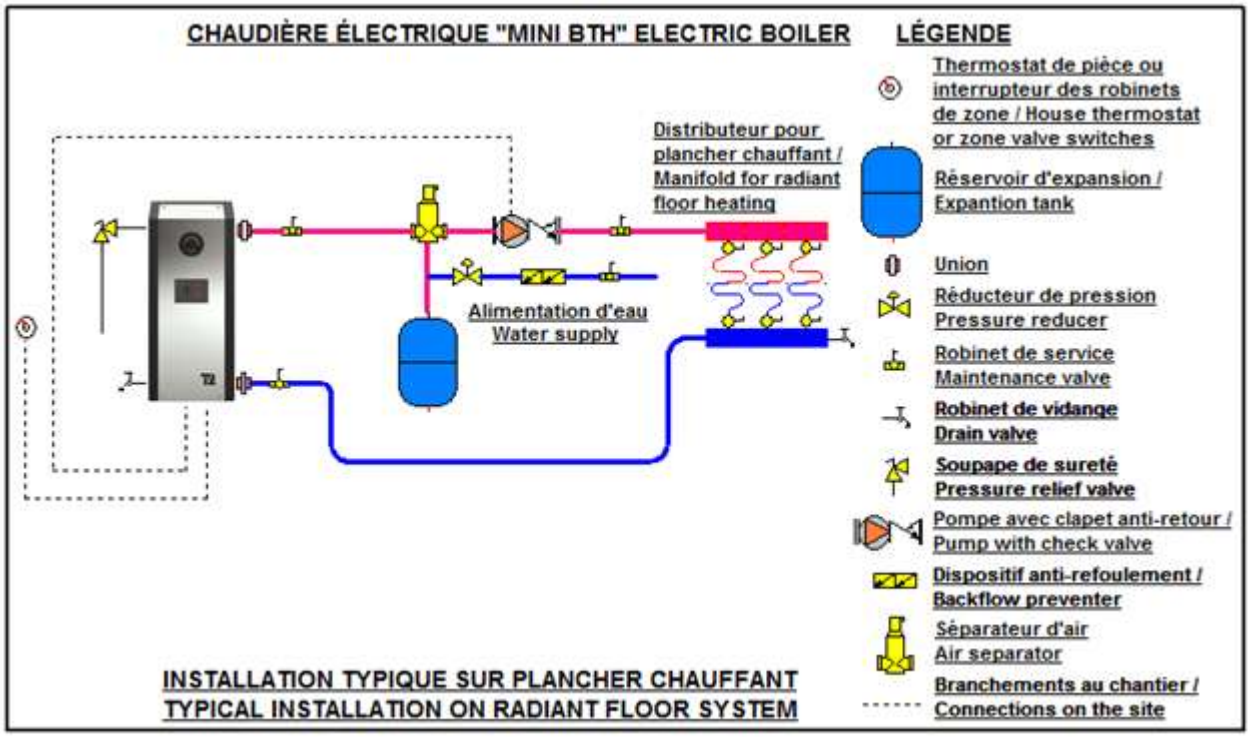

Figure 4 : Typical installation on radiant heating floor

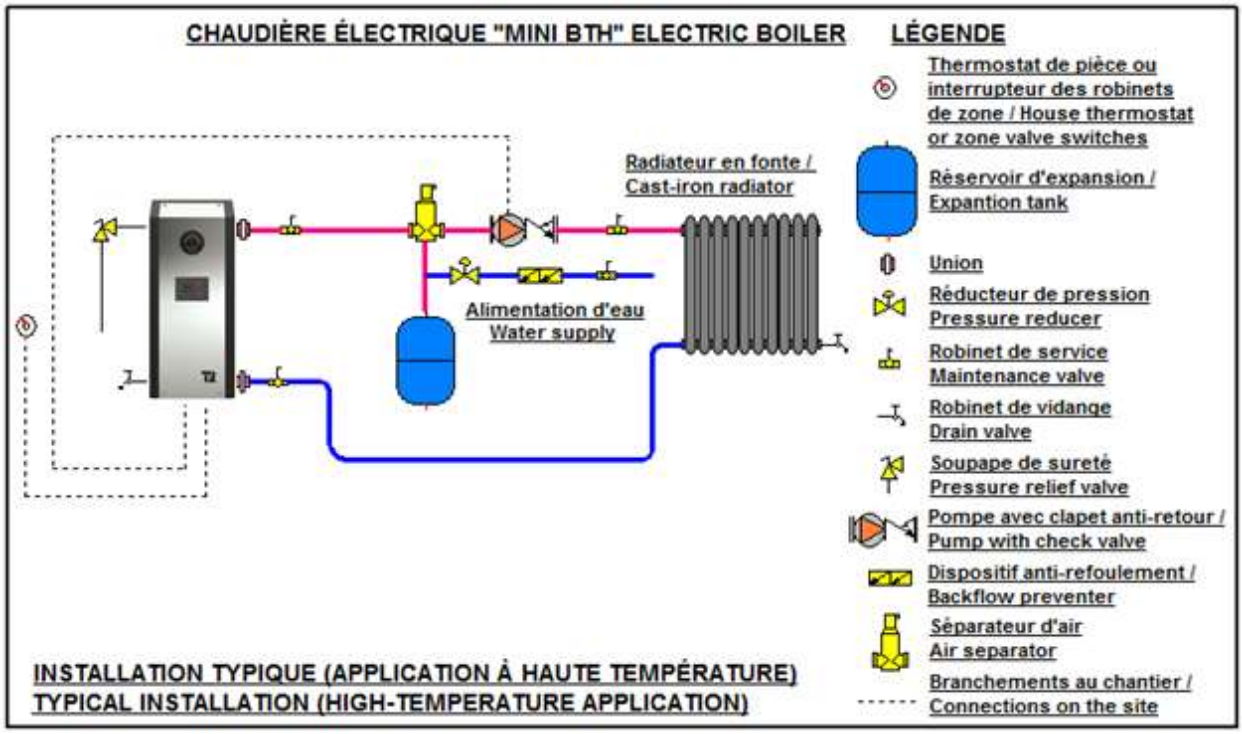

Figure 5 : Typical installation on high temperature application

3.4.3 Flow check valve

If the heating system includes a single pump, without motorized zone valve and that the heating distribution system is located above the boiler, **a flow check valve <u>must</u> be installed** on the supply distribution piping system to eliminate hot water to flow by gravity in the heating distribution piping when there is no heat demand. As an alternative, a circulating pump incorporating a spring check valve could be used.

On heating systems having more than one pump, each pump will need to be equipped with a flow check valve either incorporated into the pump or separated.

On heating systems with motorized zone valves this component is not required because the valve stops all water flow when closed.

3.4.4 Pressure relief valve

This component supplied with the unit must be installed directly to the boiler housing to the appropriate connection according to the mounting position.

Connect the outlet of the relief valve downward to a safe location in case of discharge.

The piping diameter used for the discharge piping shall not be smaller than that of the valve outlet. No valve of any type, restriction or reducer coupling should be installed on the discharge line. Local codes shall govern the installation of relief valves.

3.4.5 Expansion tank

The expansion tank must be able to store the required volume of boiler water during maximum operating temperature. The maximum allowable operating pressure is 30 psi (207kPa). Contact your installing contractor, plumbing supply house, or local plumbing inspector for assistance.

3.4.6 Water pressure regulator

The boiler should be installed in such a way that it can be automatically be fed with water in the event of a pressure drop (local regulation should be applied).

The minimum pressure obtained when the system is cold is generally 12 psi (83kPa).

This accessory shall be equipped with one or more check valves to avoid all possibilities of the boiler water returning to the potable water supply network (local regulation should be applied).

3.4.5 Air eliminator

Installation of manual or automatic air vents are required to eliminate all air from the boiler and the heating distribution system.

The main air eliminator must be installed near the outlet of the boiler on the highest point of the main supply piping. It is imperative to ensure that all air possibly located in the boiler be eliminated at all time.

3.4.7 Circulating pump

The pump shall be selected such as to be able to supply adequate flow in relation to the heating distribution system on which it will be connected and the heating capacity of the boiler installed.

Table below will give you details on required water flow for distribution systems having to operate with a temperature differential of 10F and 20F between their inlet and outlet**.**

Model	Diff. 10°F usgpm	Diff. 20°F usgpm	Boiler press. loss
3 kW	2.0	1.0	insignificant
4.5 kW	3.0	1.5	insignificant
6 kW	4.1	2.0	insignificant
7.5 kW	5.1	2.5	insignificant
9 kW	6.1	3.0	insignificant
12 kW	8.2	4.1	insignificant

Your heating wholesaler shall be able to recommend the appropriate model for your application.

The amperage drawn by the pump and other 120volts components must not exceed 15 amps.

3.4.8 Drain valve

Installed at the lowest point of the unit, it allows the unit to be drained for the eventual replacement of a defective component.

3.4.8 Strainer

This component could be required on old heating distribution systems made of steel or cast iron that could carry sediments and sludge. If such sediments accumulate at the bottom of the boiler it could be harmful to the heat transfer of the elements and generate premature failures.

3.5 ELECTRICAL CONNECTIONS

3.5.1 Main boiler supply

Boiler wiring and grounding must conform to the National Electrical Code and to state or local code requirements. The latter having precedence.
The electrical supply can be done in two different ways depending on the necessity of supplying or not external accessories (such as a pump) at 120Vac.
If the boiler electrical supply is on 208V, the position of wire terminal on the transformer connected to 240V will have to be changed to 208V.

Alternative #1: A 120VAC electrical supply is required to serve external accessories.
Electrical wiring must come from a 120/240 Vac/or 120/208Vac -1ph "L1-N-L2-" circuit protected by a properly sized breaker.

Alternative #2: No 120Vac electrical supply is required to serve external accessories (pump is supplied by a separate circuit)
Electrical wiring must come from a 240Vac or 208Vac- 1ph/60hz "L1-L2" circuit protected by a properly sized breaker.

Wire gage must be properly sized by a qualified electrician in such a way as to meet the national electrical code.
To do so, consult the boiler rating plate which will indicate the amperage drawn by the boiler at full capacity. Extra amperage will have to be added if external electrical equipments are connected to the boiler.
This value and the electrical code will be used to determine the electric cable required together with the appropriate breaker.
Many other factors must be taken into consideration in the selection of the appropriate electrical material such as the length and the type of cable used, the environment where the cable will be installed and the type of the over-current protection used.
The main terminal block of the boiler is suitable for #14 to #2 wires.
Supply cables can be made of Aluminum or Copper and be rated for a minimum of 75°C (165°F).
If aluminum cables are used, it shall be of an adequate size (generally bigger) and particular consideration will have to be respected such as the use of DE-OX inhibitors in order to meet the National electrical code.

3.5.2 Electrical supply of External accessories

The total 120vac consumption of the boiler and external accessories must not exceed 15A.
The maximum electrical consumption of 24vac external accessories connected to R&C terminals must not exceed 30Va.
N.B.: The 24Vac supply of the boiler must not be mixed with another 24Vac external supply.

3.5. Thermostat(s) and pump(s) connections

Thermostat: Use a low voltage 24Vac thermostat designed for central heating system (do not use a 240Vac thermostat designed for electric baseboards).
Some thermostats are equipped with a temperature sensor for radiant floor application. The purpose of the thermostat is to control the operation of the circulating pump. When the boiler water will drop, the electric heating element will come on.

Heating systems equipped with one thermostat and one pump:

With an 18-gauge cable, connect the room thermostat directly to the following boiler terminals.
Two wire thermostat: Terminals "**R**" and "**W**"
Three wire thermostat: Terminals "**C**", "**R**" and "**W**"
Using 14-gauge wires to connect the circulating pump directly on terminals "**P1-P2**" (120vac)

Multiple pumps zoning applications:

Components shall be connected in such a way that when a thermostat is generating a heat demand, only the corresponding pump will operate.

To do so, you will need relays as illustrated below.

Boiler terminals **P1-P2** and **C-R-W** will not be used.

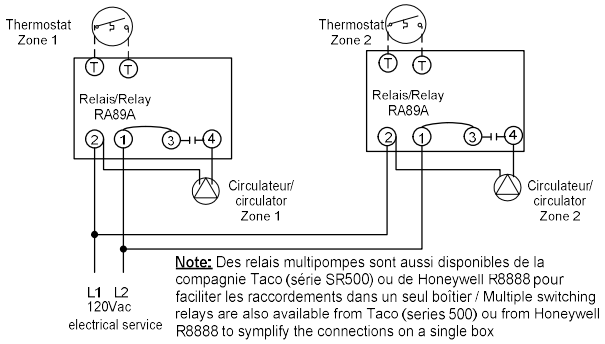

Figure 6 : Zoning with multiple pumps

Zoning applications with motorized valves

Connect the end switch contact of all motorized valve to terminals R & W on the boiler.

Connect the circulator to terminals “P1-P2 in the boiler.

The connection of the thermostats to their corresponding zone valve shall be done according to the zone valve manufacturer’s instructions. See on fig.5 below a typical example.

The R & C terminals on the boiler can be used to supply 24Vac to the zone valves if the corresponding load does not exceed 30VA otherwise an external transformer will be required.

Voltage at the outlet of the transformer shall never be under 24Vac.

N.B.: The 24Vac supply of the boiler must not be mixed with another 24Vac external supply.

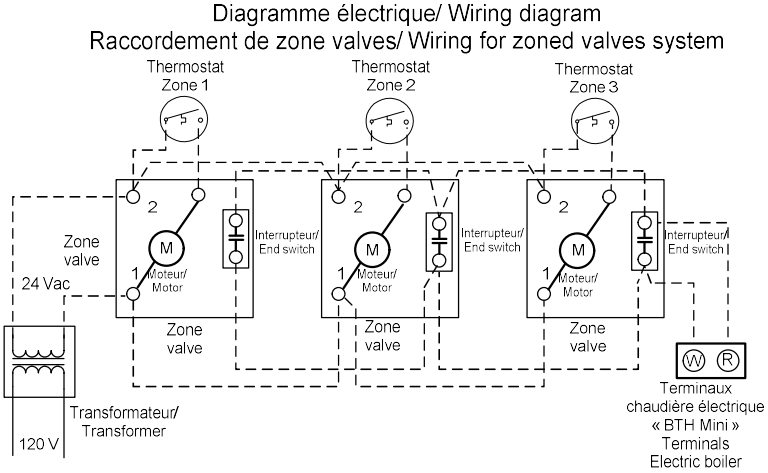

Figure 7 : Zoning with Motorized valves

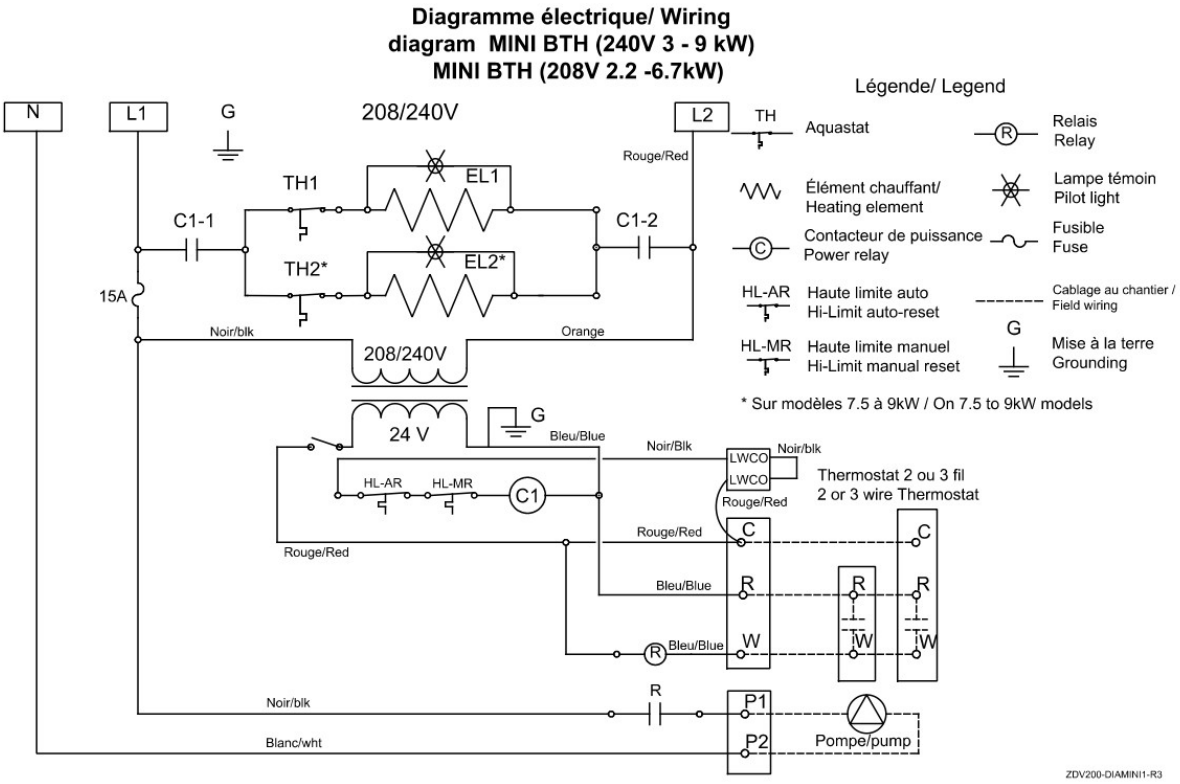

Figure 8 : Wiring diagram (3-9 KW)

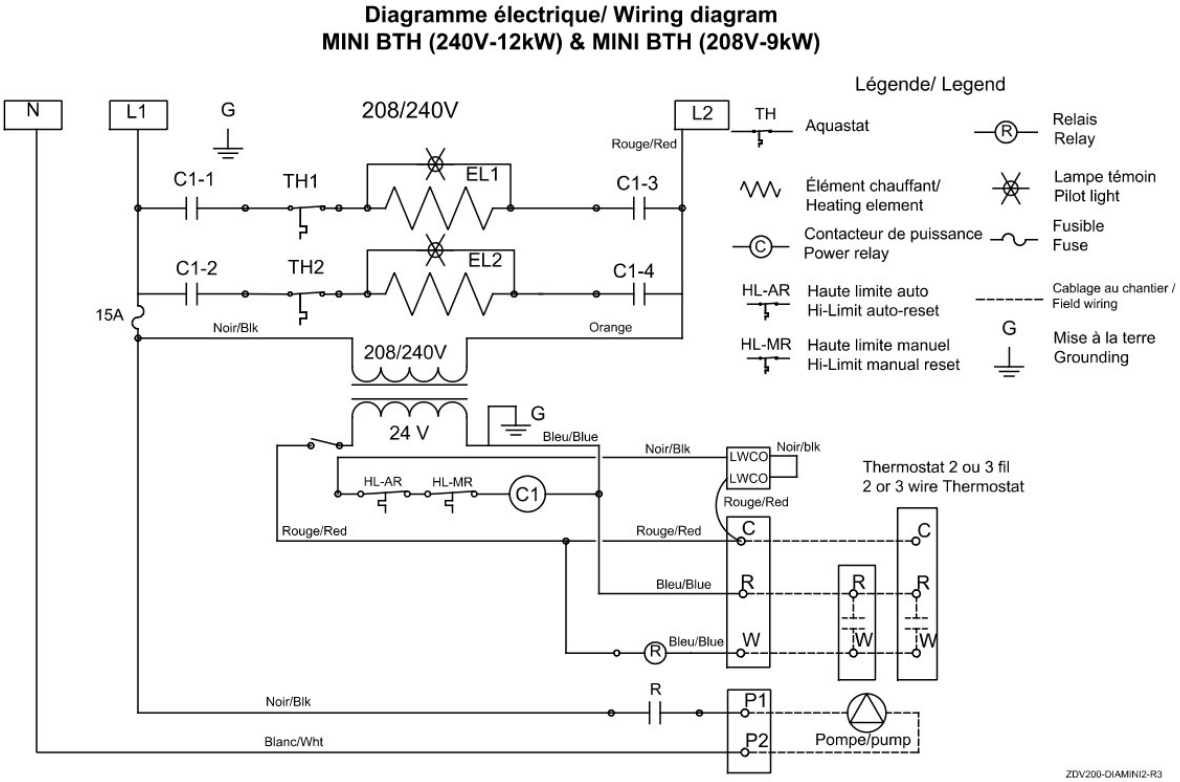

Figure 9 : Wiring diagram (12 KW)

Section 4: START UP OPERATION

SAFETY PRECAUTIONS

Before operating this boiler, be sure to read and follow these instructions, as well as the warnings printed in this manual. Failure to do so can result in unsafe operation of the boiler resulting in property damage or bodily injury. Should you have any problems reading, following or difficulty in understanding the instructions in this manual, STOP, and get help from a qualified person.
Do not turn on the boiler unless it is filled with water. Do not turn on the boiler if the cold water supply shut-off valve is closed.

4.1 PREPARATORY STEP

- Make sure that all the piping and electrical connections have been made.
- Fill the boiler and the heating system with water.
- Check for leaks.
- Check the pressure reading at the temperature and pressure indicator. It should be around 12 psi.
- Adjust the temperature control(s) to OFF.
- Turn the service switch in front of the unit to ON
- Adjust the house thermostat to generate a heat demand. The pump shall start.
- Check that the water is circulating in the distribution system and that all the air is expelled.

4.2 TEMPERATURE CONTROL ADJUSTMENT

Each temperature control has the function to control one heating element.
Adjust each control to the desired temperature by turning the knob of the control. The reference mark for the adjustment is a red dot located under the knob.

- One control (any of the two) should be set at the maximum temperature required by the heating system

The table below gives a good indication of the temperature value generally required for different applications.

Application	Baseboards	Cast Iron radiators	Warm floor in concrete	Warm floorr between joists
Temp. °F	**180°F**	**155°F**	**110°F**	**130°F**

- Set the value of the second control (Model of 7.5 to 12kW only) at approximately 5F below the setting of the first control.

The indicating lamp(s) on front of the unit shall come ON as you increase the temperature setting of the control(s).
On initial startup it may take a considerable amount of time before the water reaches the desired temperature.
Further adjustments may be necessary as you use your boiler and space heating system.

4.3 INSPECTION AFTER STARTUP

- Measure the amperage drawn by the unit. It shall be around the value indicated on the boiler name plate.
- Partially close the isolating valve at the outlet of the boiler to reduce the water flow and consequently increase the outlet temperature. Heating elements should stop at a temperature slightly higher than the selected value on the controls
- Lower the adjustment of the room thermostat(s). The pump should stop but the element(s) will stay on for a few seconds until the temperature of the water reaches the setting temperature of the control(s).
- Check the pressure reading at the gauge on the unit. It should not be higher than 30psi when the distribution system will reach its maximum operating temperature.

N.B.: This boiler is designed to remain hot and consequently always ready to receive a demand for heat all through the heating season. It will then be normal to occasionally see an indicating lamp in operation for a few seconds even if there is no call for heat. It will also be normal to occasionally see the temperature value at the boiler gauge higher than the normal values. This temperature will get back to normal at the next heat demand.

Section 5: MAINTENANCE

5.1 INTRODUCTION

Properly maintained, your boiler will provide years of dependable, trouble free service. It is recommended that a regular routine maintenance program be established and followed by the user. Components are subject to eventual failure that require service. Failure to use the correct procedures or parts in these circumstances may make the unit unsafe or reduce the life of the boiler.
The owner should have the following inspection and maintenance procedures performed:

5.1.1 At all times

An immediate inspection should be made if:

- An odor of melted plastic or overheating material is detected
- A leak coming from the unit or the heating system is observed

If a leak is detected at the outlet of the safety relief valve, it could be related to a problem with certain components installed on your heating distribution system. A quick correction is then required.
Never plug the outlet of this safety relief valve if a dripping condition occurs.

5.1.2 Twice a year

- Check for the proper operation of the automatic air purger(s) and eliminate air from the radiators using their manual air purger.

5.1.3 Annually

WARNING

Make sure that the power on the unit has been turn off before opening the electrical compartments of the boiler.

- It is recommended that a visual inspection be made on the electrical compartments of the boiler to check the seal of the gasket on the element flange and also check for signs of overheating on the components and wires. Required corrections should be made as soon as possible. Parts used for replacement should be the same as the original equipment.
- Close required isolating valves and clean the strainer (if used) located on the heating return piping.
- The inspection should also include a verification of the torque of all the terminals screws and particularly the power contactors. The inspection should follow with a verification of the main temperature controls in operation as well as an amperage and voltage reading to verify the proper operation of all the heating elements.
- Open the boiler drain valve to eliminate deposits that could have settle at the bottom of the boiler. Stop when water gets clear. If there is no flow or a very small flow, it could be due to a large accumulation of deposits at the bottom of the unit. If so, close the isolating valves at the inlet and outlet of the boiler, remove heating element(s) and clean the inside of the tank with a strong spray of water.

5.2 REPLACEMENT PARTS

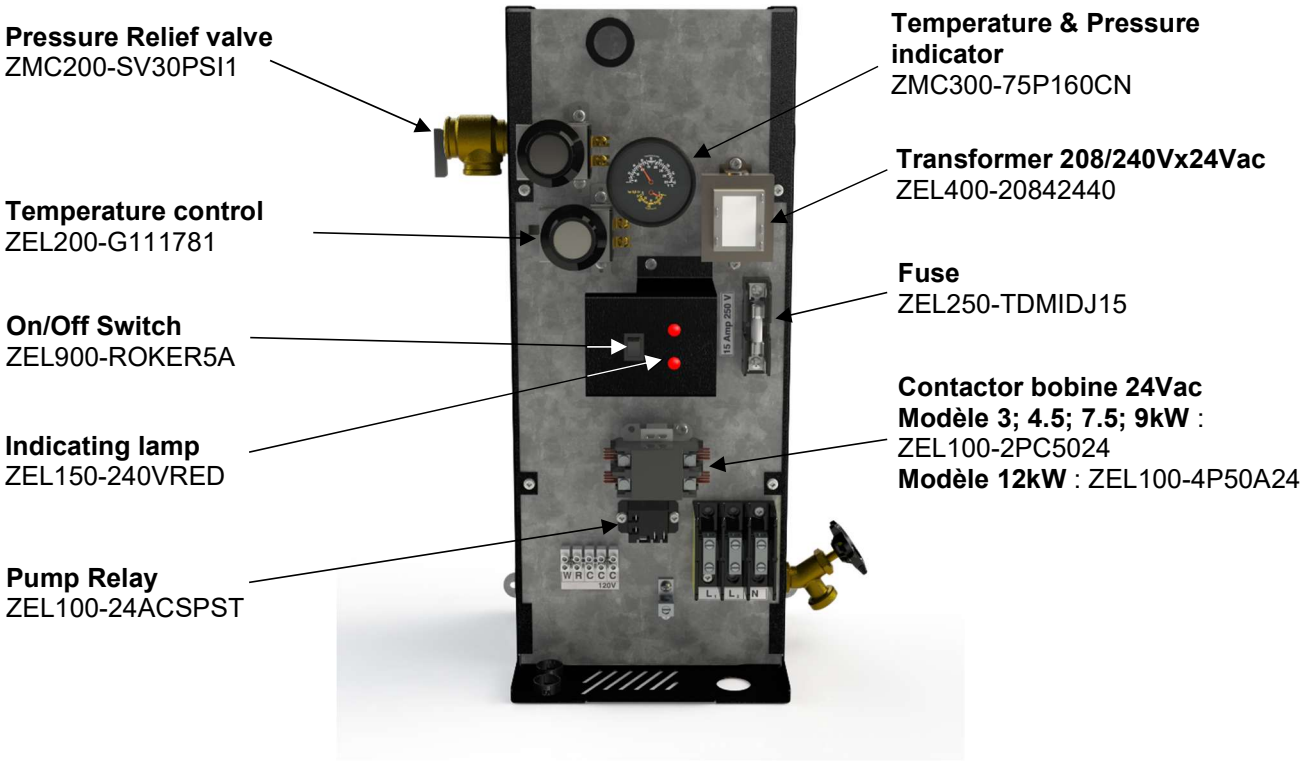

Figure 10 : Replacement parts (Front)

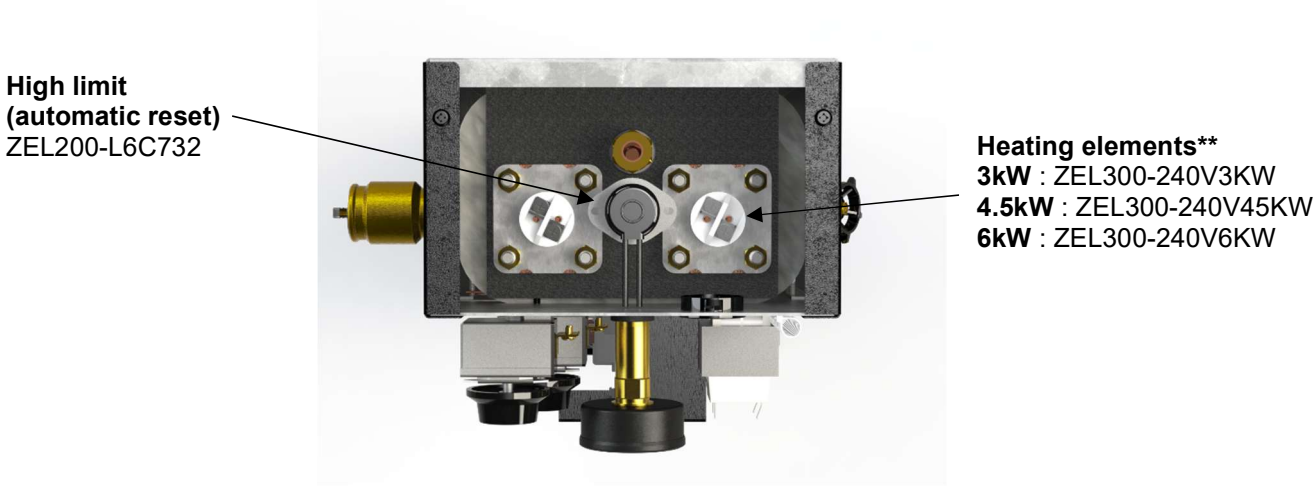

Figure 11 : Replacement parts (top)

**** When replacing a heating element, ensure that its orientation is identical as the original.**

MINI BTH LIMITED WARRANTY

Warranty Coverage on the tank.

Thermo 2000 Inc. hereby warrants that the **MINI BTH** tank on normal use and service will not leak for a period of fifteen (15) years from the date of purchase. The warranty is valid as long as the original residential purchaser owns the building in which the unit was originally installed. In the event that a leak should occur within this limited warranty period due to defective material or workmanship, such leak having been verified by an authorized company representative, Thermo 2000 inc. will repair or replace at our sole discretion the failed unit with the nearest comparable model at the time of replacement.

The original residential purchaser is responsible for all costs associated with the removal and reinstallation, shipping and handling to and from the manufacturing plant. The replacement unit will be warranted for the remaining portion of the original Warranty.

Warranty coverage on parts

All **MINI BTH** components & parts are warranted for a period of two (2) years against defects due to defective material or workmanship. The original purchaser is responsible for all costs associated with the removal and reinstallation, shipping and handling to and from the Manufacturer. The components, repaired or replaced are warranted for the residual period of the initial warranty on the parts.

Exclusions

This warranty is void and shall not apply if:

A) Defects or malfunctions resulting from installation, repair, maintenance and/or usage that are not done in conformity with the manufacturer's installation manual.
B) Defects or malfunctions resulting from installation, maintenance, or repair that are not done in accordance with regulations in force.
C) Defects or malfunctions resulting from improper installation, maintenance or repair done carelessly or resulting from consumer damage (improper maintenance, misuse, abuse, accident or alteration).
D) Installation in which a relief valve (pressure) is not installed or if it is not functioning properly, or when it is not connected to a drain to avoid damage to the property.
E) Installation is not completed by a qualified installer that is certified to install electric boilers in the province or state at the moment of the installation.
F) Installation in which liquid circulating in the tank does not remain in closed circuit or installation in which piping is leaking or on systems with polybutylene pipes or other having no oxygen absorption barrier.
G) Installation where the acidity of water is not within the normal Environmental Protection Agency (EPA) (between pH 6.5 – 8.5) guidelines or the domestic water contains abnormal levels of particles matter or water exceeding 10.5 gpg.
H) The **MINI BTH** unit has been subjected to non-authorized modifications.
I) Defects or malfunction resulting from storing or handling done elsewhere than Thermo 2000's manufacturing plant.
J) Units on which the serial number is removed or obliterated.

Limitations

Thermo 2000 Inc. shall not be responsible for any damage, loss, and inconvenience of any nature whatsoever, directly or indirectly, relating to the breakdown or malfunction of the unit. This warranty limits its beneficiary's rights. Nevertheless, the beneficiary may have other rights, which vary from jurisdiction to jurisdiction.

This warranty replaces any other expressed or implicit warranty and constitutes the sole obligation of Thermo 2000 Inc. towards the consumer. The warranty does not cover cost of removal, reinstallation or shipping to repair or replace the unit, nor administration fees incurred by the original consumer purchaser.

Thermo 2000 Inc. reserves its rights to make changes in the design, construction, or material, as in its judgment constitute an improvement of former practices.

This warranty is valid only for installations made within the territorial limits of Canada and the United States.

Warranty service procedure

Only authorized **MINI BTH** dealers are permitted to perform warranty obligations. The owner or his contractor must provide Thermo 2000's head office or authorized depot with the defective unit together with the following information: **MINI BTH** model and serial number, copy of the original sales receipt and owner's identification certificate.

THERMO 2000 INC.

500, 9th Avenue, Richmond (Qc) Canada J0B 2H0
Tel: (819) 826-5613 Fax: (819) 826-6370
www.thermo2000.com